Installation Manual

Model 432, 438, 439

25 & 55 Gallon Preservative Applicator

HARVEST TEC

Equipment and Products for Quality Hay.™

P.O. Box 63 • 2821 Harvey Street • Hudson, WI 54016
800-635-7468 • www.harvesttec.com

432,438,439-13 INST
4/16

(intentionally blank)

Harvest Tec 432, 438 & 439 Installation Table of Contents

	Page
Introduction	**4**
Model reference	**4**
Tools needed	**4**
Installation of the applicator	**5-17**
1. Mounting tank and saddle	5-9
Model 432	5-6
Bale thrower modification	5
Model 438	6
Model 439	7
Install 4409	7
Install 4410	7
Install 4415	7
Install 4483	8
Install 4516	8
Install 4484	8
Install 4486	9
2. Installation of spray assembly	10-15
Install 4409	10
Install 4410	10
Install 4415	11-12
Install 4484, 4485 & 4486	13
Install 4516	14-15
3. Installation of gauge, reach rods and hose manifold	16
4. Installation of drain fill line (432 & 438 kits only)	17
5. Installation of plumbing	18-20
Model 432	18
Model 438	18
Model 439	19-20
Parts breakdown	**21-33**
Model 432 Base Kit	21
Model 438 Base Kit	22
Model 439 Base Kit	23
4409 Install Kit	24
4410 Install Kit	25
4415 Install Kit	26
4416 Install Kit	27
4483 Install Kit	28
4484 Install Kit	29
4485 Install Kit	30
4486 Install Kit	31
4516 Install Kit	32
4400C Install Kit	33
4415 Spray Shield Template	**34**
Warranty Statement	**35**

Introduction

Please read this manual carefully to ensure correct steps are followed to attach the applicator to the baler. This applicator is designed to apply Harvest Tec buffered acid. The model 438 and 439 base kits include the following parts: tank, frame, pump, gauge, hose, pressure regulator and miscellaneous hardware. The applicator can be installed on most balers with the proper installation kit (not included.) Before installing the unit on the baler, make sure you have the proper installation kit (See Model reference). If you are unsure about your installation kit, contact your local dealer for specifications. For your convenience we have included a parts break down in the back of this manual.

Left and Right sides are determined by facing in the direction of forward travel.

Model reference

Baler make	Baler model	Base Kit	Installation kit	Tank size
Case IH	SBX530 - SBX550 & SB531 – SB551 square balers	439	4415	25 gallon
Case IH	(2002 and older) all round balers	439	4484	25 gallon
Challenger	RB34, RB44, RB46, & RB56 round balers	439	4484	25 gallon
Hesston	All round balers	439	4484	25 gallon
John Deere	All small square balers	439	4410	25 gallon
John Deere	410-510 & 430-530 round balers	439	4484	25 gallon
John Deere	All 5, 6, & 7 series round balers	439	4483	25 gallon
John Deere	All 8 & 9 series round balers	439	4516	25 gallon
New Holland	570 - 580 & BC5060-BC5080 square balers	439	4415	25 gallon
New Holland	640-688 round balers	439	4486	25 gallon
New Holland	630-638 round balers	439	4484	25 gallon
Vermeer	Rebel series	439	4484	25 gallon
Case IH, New Holland	New Holland 200 – 300 SERIES, 565, BC 5050 & Case IH SBX 520, SB521 & all others	439	4409	25 gallon
Other	Round balers	439	4484	25 gallon
Case IH	All inline small square balers	432	4416	55 gallon
Challenger	All inline small square balers	432	4416	55 gallon
Hesston	All inline small square balers	432	4416	55 gallon
Massey Ferguson	All inline small square balers	432	4416	55 gallon
New Idea	All inline small square balers	438	4485	55 gallon

Tools Needed

SAE wrench set
Standard screw driver
Crescent wrench
1-1/2” hole saw (4415 install only)
Side cutter
Hose cutter
Hammer
Measuring tape
SAE socket set
Drill bit set
Center punch
Metric socket set

Installation of the Applicator

1. Mounting tank and saddle

Model 432

Tank legs will be mounted to the back side of the baler behind knotters and before the bale tensioner (figure1).

Using figure 2 as a reference, mark the two holes on each side of bale chamber that need to be drilled. Line up saddle leg on each side to verify holes before drilling, show in figure 3. Drill all four holes to 1/2" in size.

Bolt legs to baler with 1/2" x 1 3/4" Allen button head bolts, flat washer, Lock washer, and nuts.
*Note: bolt head is on inside of bale chamber. Level top of leg before completely tightening bolts, figure 4.

Bale Thrower - Additional Bracket

When baler is equipped with a bale thrower, bracket (001-4703QC) will need to be used. First secure the kicker so it will not rotate when you remove the front pin on the hydraulic cylinder. Remove pin, Install tank leg over mount. Reinstall pin. Use part 001-4703QC which is a spacer that will go between the leg and side of the baler to take up the space the throwers front hydraulic mount adds.

Figure 1

Figure 3

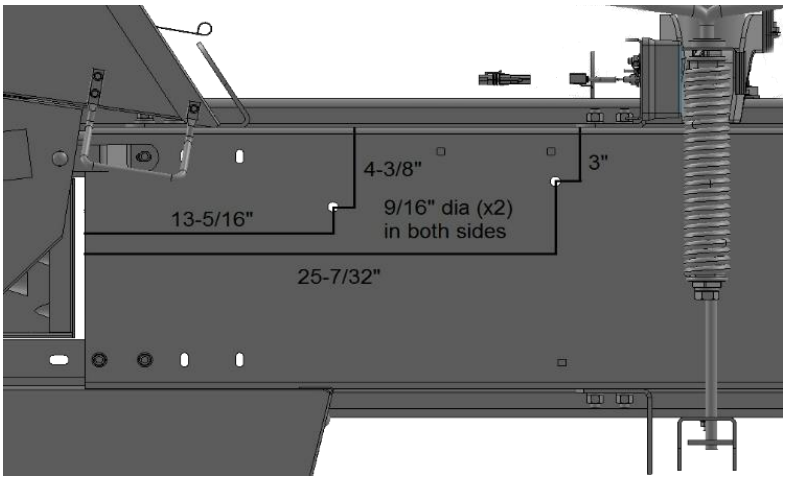

Figure 2

Figure 4

Model 432 (continued)

Saddle & Tank

Mount tank saddle (001-4703X) onto tank legs as shown in figure 5. Bolts are pre-installed on saddle, secure with 1/2” locks, washers, and nuts.

Figure 5

Model 438

Install 4485

Locate parts bag 7. Place tank (005-9203) onto saddle (001-4703). Make sure side tank fitting is placed to the baler’s left side when looking at it from the front. Attach straps (001-4402) to saddle using 5/16” x 4” bolts. Make sure to double nut all four bolts.

Figure 6

Figure 7

Mount the two legs and saddle directly behind the knotters as shown in the picture above (figure 6). The tank straps will need to be loosened and tank rotated towards the front of the baler to ensure a level tank. Two 1/2” holes will need to be marked and drilled directly below were the legs will sit. Use the supplied 1/2” x 1-3/4” bolts, nuts, locks and flat washers to secure both sides. Insert the allen head side of the bolt into the bale chamber to eliminate any hay snagging on the bolt. Connect leg supports to tank legs and baler as shown in figure 7. Secure with 1/2" x 1-3/4” bolts, nuts, locks and flat washers.

Model 439

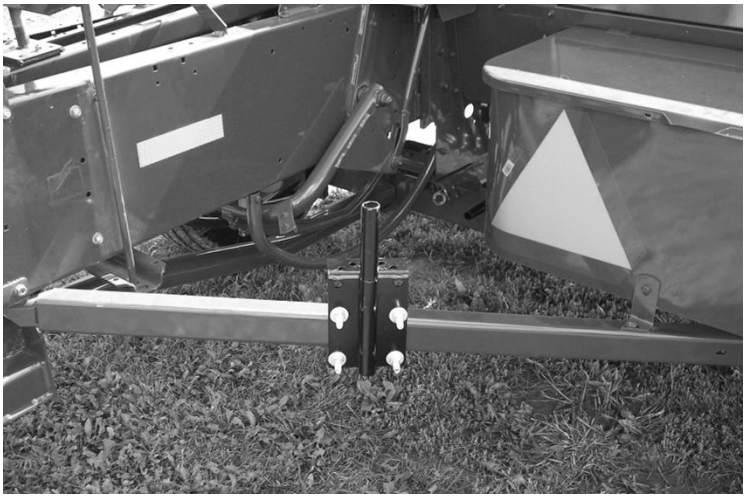

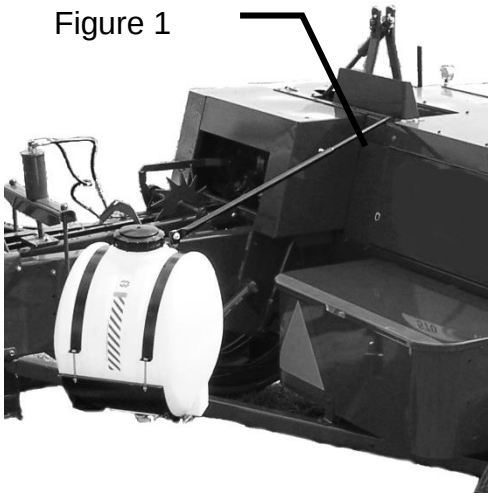

Install kits 4409, 4410, and 4415

Mount the unit on the diagonal frame behind the twine box, as pictured using the base clamp (001-4406) and U-bolts (001-4406A). Locate the top reach rod (Figure 1) in a position opposing the overhanging tank. Bolt one end to the top stub pipe on the tank saddle and the other end to a secure location on the baler. **NOTE: REACH RODS MAY HAVE TO BE BENT ON THE TAB TO ALIGN PROPERLY.**

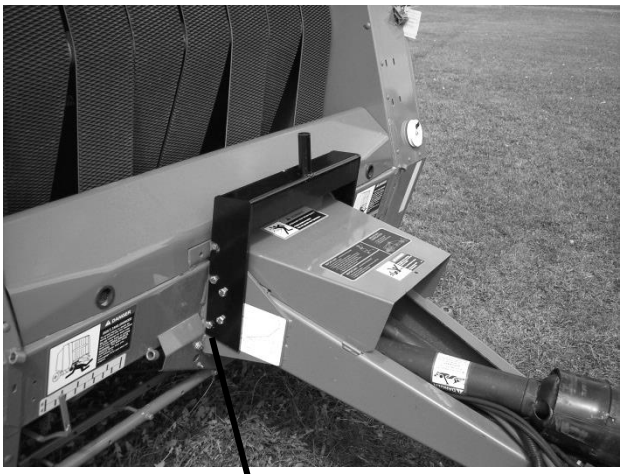

Figure 1

Install kit 4483 & 4516

The base bracket straddles the baler's tongue resting up against the tongue's intersection with the baler's cross frame (for 8 Series and older). The bracket is bolted to the baler using three bolts on each side holding the tongue to the cross frame. Replace each of these bolts with the longer bolts provided (for 9 Series only two bolts per side are used). The tank mounting bracket may flex when tightening down bolts because some hitches are welded at different angles. Install the tank on top of the stub pipe; the tank saddle will be secured with the 1/2" x 1-1/2" inch hardware. The bottom support plate will attach to the bottom of the saddle and to the front of the mounting bracket. Tighten down and secure all hardware.

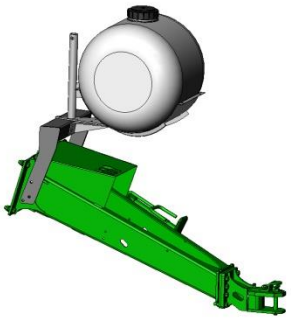

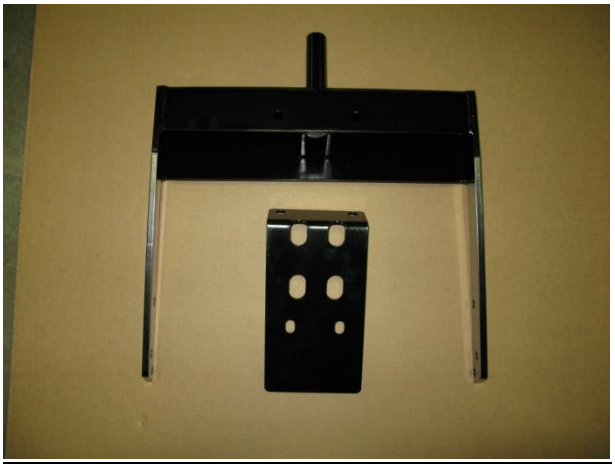

Install kit 4484

Locate the base bracket (Figure 1 on the baler's tongue or cross frame. Care must be taken to make sure the applicator will be clear of the balers moving parts and the rear wheels of the tractor. Line up the bracket with any existing holes, drill new if necessary. The bracket will be secured with four 1/2" bolts. Mount the tank on top if the stub pipe. Secure with the 1/2" x 1-1/2" inch bolt and hardware.

Figure 1

Install kit 4486

Locate the mounting bracket (Figure 2) on the front of the baler's tongue where it joins the hitch acceptor. Use the 5/8" bolts included to join the two parts of the baler. Orient the bracket so the two holes on top of the bracket will face away from the baler this will allow the applicator to face rearward. Install the tank on top of the mounting bracket using two 1/2" x 1-1/2" bolts and hardware. The tank will face towards the baler when installation in complete.

Figure 2

2. Installation of spray assembly

Install kit 4409

Conventional baler with gathering forks.

1. Mount the left hand nozzle so that it is approximately 80% across the width of the pick-up head. Example: if the head is 60” wide, locate the nozzle 48” from the right side of the head (60”x80”.)
2. Mount the right hand nozzle so that it is approximately centered on the pickup head.
3. Bend the nozzle bar in so that the tip is pointed in toward the bottom of the gathering chamber and about 16” above the sheet metal base of the chamber. Twist the nozzle so the tip is tilted 45 degrees from horizontal.

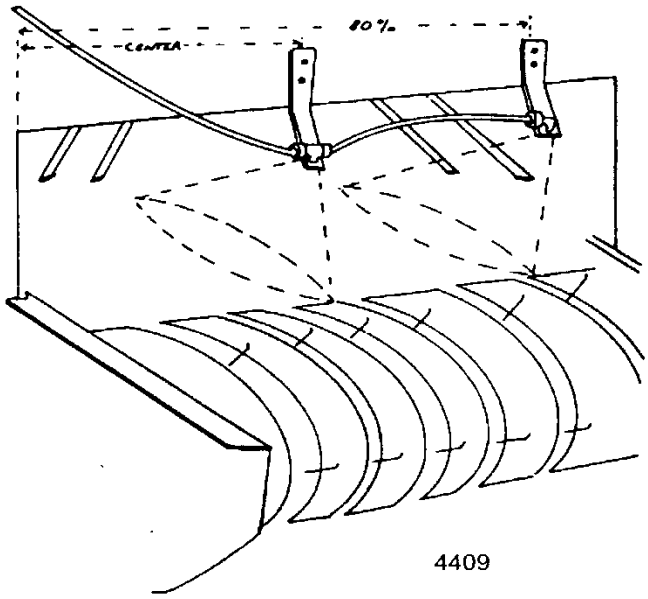

4. Three 1/4 inch lines will need to be run from the hose manifold to the nozzle straps. Use the color-coded stickers to attach the correct hose to the correct tips, and couplers. Secure the lines to the bracket and spray shield using the supplied hose clamps.

Install kit 4410

Bolt the nozzle holder (A) up under the baler’s hood. Remove 3 bolts (B) on the baler and replace with hardware in kit to fasten lip(C) securely in place. Three 1/4 inch lines will need to be run from the hose manifold to the spray shield. Use the color-coded stickers to attach the correct hose to the correct tips, and couplers. Secure the lines to the bracket and spray shield using the supplied hose clamps.

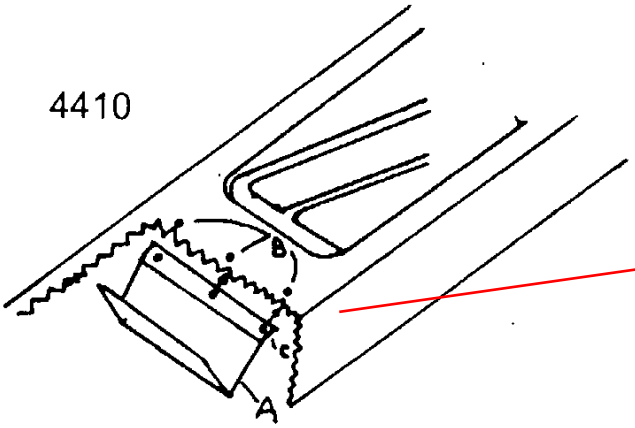

Install kit 4415

Locate the hay guard directly above the bale chamber. This install can be done with the hay guard in the baler, but it is recommended to remove. Consult your dealer for procedure.

Installation of spray shield

1. Mark a point 10” from the knife and centered on the hay guard. Next, mark a point 20” from the knife and centered on the hay guard. Using a straight edge draw a line between these two points.
2. Locate the template in the back on the manual. Align the template accordingly with the centerline and the correct side pointing towards the knife. The first point will align on the 10” mark from the knife. Tape the template to the hay guard following the centerline.
3. Center punch all three of the points on the hay guard. Verify measurements on template.
4. Remove the template and mark the center-punched points 1 through 3 starting at the point closest to the knife.
5. Drill all three holes with an 1/8” drill bit **ONLY THROUGH THE TOP PIECE OF STEEL.**
6. At point 2 drill only through the top of the hay guard with a 1 1/2" hole saw.
7. Drill points 1 and 3 through both the top and bottom steel using a 1/4" drill bit.
8. Insert two 1/4" x 2” button head cap screws through holes 1 and 3. The head of the screw will need to be down (in the chamber). Secure with nylon lock not.
9. Place spray shield with plastic fitting down onto the hay guard. Secure with 1/4" flat washers and nut. Turn the white nylon fitting down until it touches the bottom of the hay guard. This fitting will be used as a drill guide.
10. Drill through the bottom steel on hole 2, with a 1/4” bit. Remove the shield and drill the hole with a 9/16” bit. Be careful to not oblong the holes. De-bur any metal filings left around the three holes on both sides of the hay guard.
11. Remove the plastic drill guide from the shield and replace with the elbow fitting. Place the check valve, tip and cap onto the end of the elbow. Reference the owner’s manual for the proper tip selection.
12. Thread the elbow into the center threaded hole. Do not thread all the way down, only start the elbow.
13. Place the shield on the hay guard and secure by pressing down. Thread the elbow with tip down until it touches the bottom metal.
14. Secure the spray shield with the knobs.

Installation of hose and support bracket

1. If the hay guard was removed for shield installation reinstall at this time.
2. Mark a point 6” from the first rotating tine on the center of the hay guard. Center punch this mark and drill a 1/4" hole through both top and bottom of the hay guard.
3. Bolt the bottom bracket (001-4425B) using 1/4" x 2” button head cap screw. Secure with a 1/4" flange nut. The head will need to be down (in the chamber).
4. Loosely install the remaining bracket (001-4425B) to the bottom bracket attaching in the middle. Level the two pieces and extend the top bracket until it reaches the top of the baler. Secure with a 1/4" flange bolt and nut.
5. Mark and drill the top hole with a 1/4" bit. Secure with a 1/4" flange bolt and nut.
6. Route the hose from the pump down the cross member the tank is mounted on towards the right side tire. The hose will go up the right side of the baler towards to the top and center of the baler towards the hole that will be made in the next step.
7. Cut a 1 1/2" hole in the top of the baler for the hose to route through. Install the grommet once the hole is complete.
8. Attach the hose, to the elbow, securing with the hose clamp.
9. Secure the hose on the end of the spray shield with one jiffy clips (008-9010) and a 1/4" x 1/2" round head screw.
10. Install the hose from the shield under the hay tine, to the bracket, and out the top.
11. Secure the hose to the bracket with two jiffy clips (008-9010) and 1/4" flange bolts and nuts. **Keep the hose in the center of the bracket.**

Install kit 4415 (continued)

12. Run the hose through the top of the baler and down towards the tank. Use the supplied jiffy clips (008-9010) to secure hose in route to the pump.
13. Connect the hose to the pump. See plumbing section.

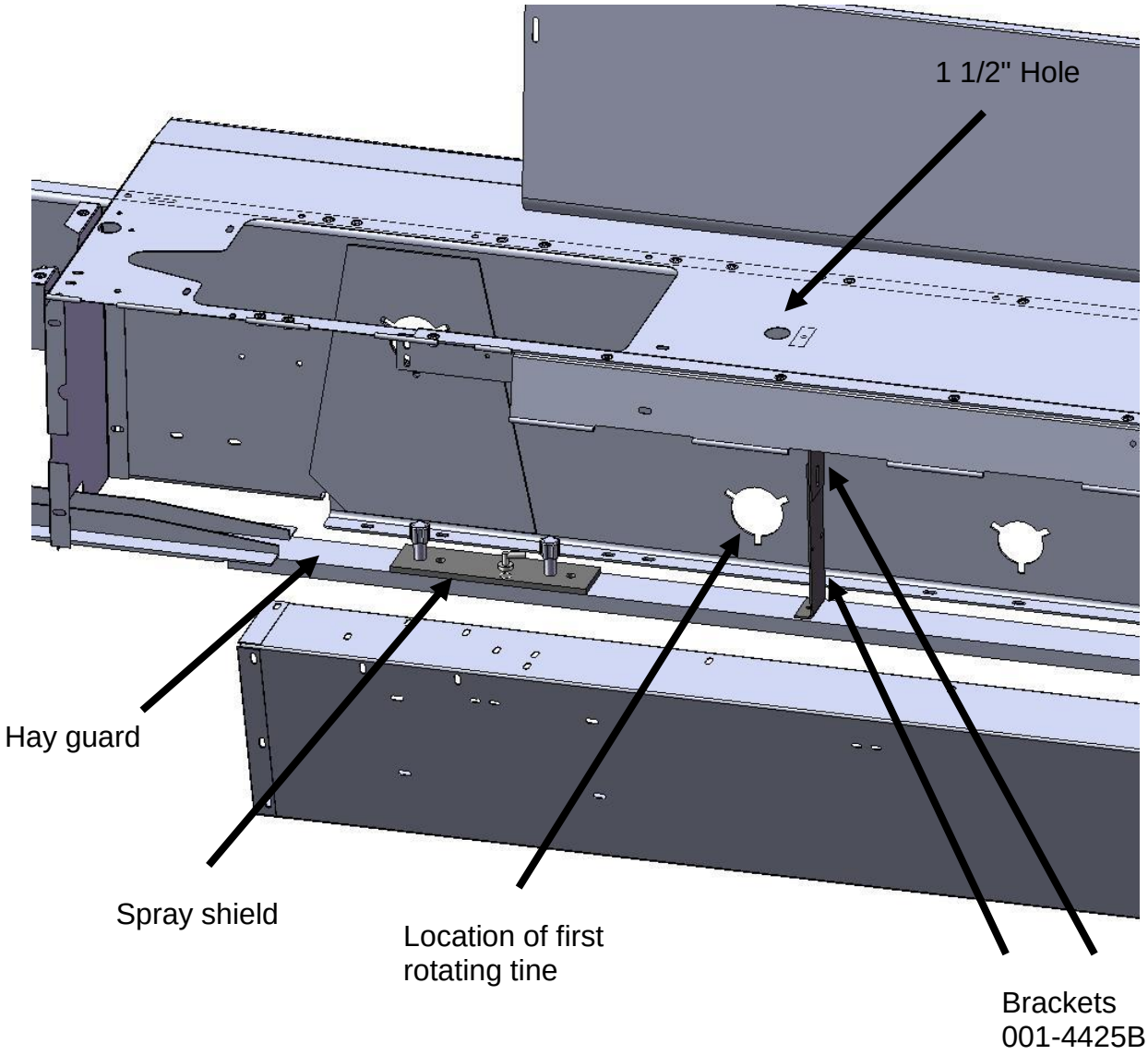

View from behind the twine box with the inspection door open.

Install kits 4484 & 4486

PICK-UP HEAD WIDTH	LEFT SIDE (Use plugged fitting)	CENTER (Use 2-way fitting)	RIGHT SIDE (Use 2-way fitting)
48”	12” from left	Center	12” from right
60”	14” from left	Center	14” from right
72”	15” from left	Center	15” from right

Aim the nozzle pipes up so that the tips spray in a generally horizontal direction. The tips should be pointed toward the starter rolls of the baler. The tips should be located so they will be somewhere between 14” and 18” form the normal path of hay.

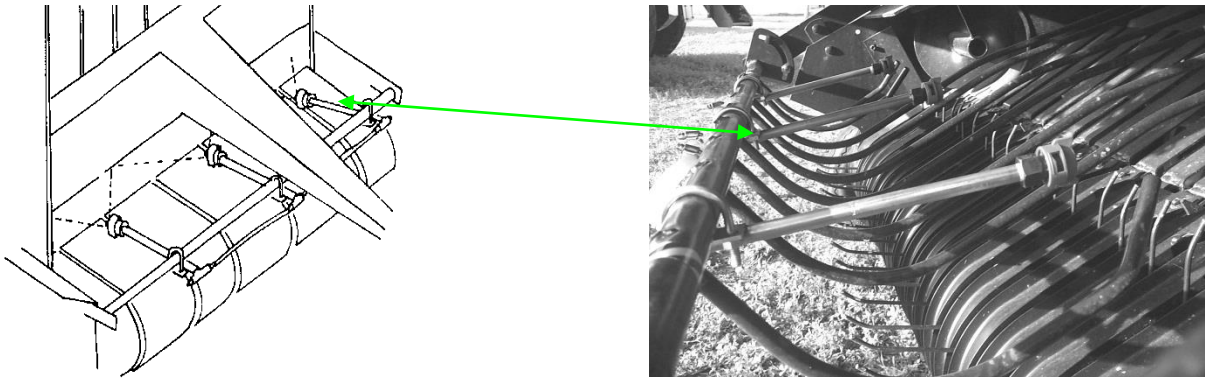

Install kit 4485

Figure 1

Figure 2

Install spray shield (001-4424B) on baler as shown in Figure 1 and 2. Use the two existing holes shown in Figure 1 and one existing hole shown in Figure 2 to attach the spray shield.

Install kit 4516

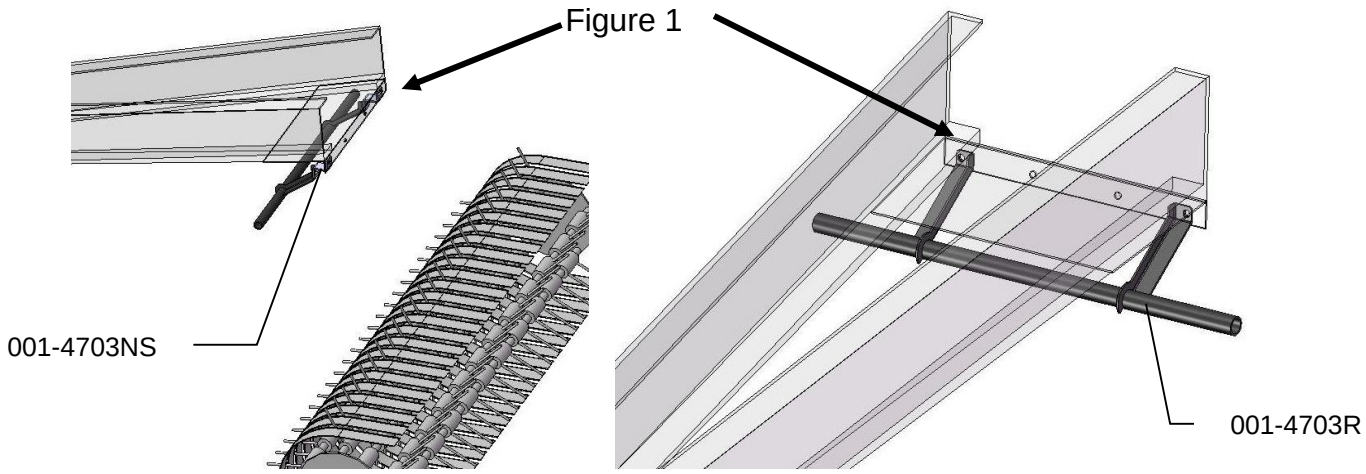

Locate the four flange head bolts (figure 1) where the baler hitch bolts to the baler frame. For 5 foot wide balers remove the two outside bolts and install the nozzle holder as shown using two M12 x 45 flange bolts and nuts. For 4 foot wide balers install the 001-4703NS spacers between the baler and the 001-4703R and install the nozzle holder as shown using two M12 x 45 flange bolts and nuts. These spacers will move the nozzle holder down and away from the twine arms. Tighten the nozzle holder hardware. Install the center nozzle tube slightly off center to avoid the roller baffle stop. The two remaining nozzle tubes, will mount one inch in from each end. Do not fully tighten. Lift the roller baffle and position the end of the nozzle tubes to be just above the baffle when lifted to its highest point. Tighten the nozzle plate to the nozzle holder.

Install Kit 4516

Twine and Net Balers

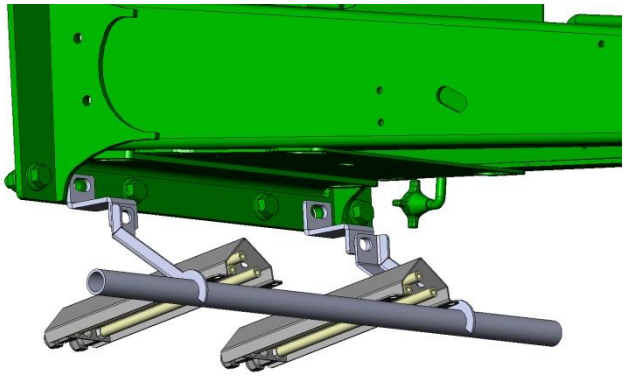

Locate the four flange head bolts where the baler hitch bolts to the bottom side of the baler frame. Remove the two outside bolts. Attach the spacers (001-4703NS) to the **hitch side** of the baler frame. Use original hardware to secure. Attach the nozzle holder (001-4703R) to the spacers with the supplied M16 x 40mm flange bolts and nuts. Attach the nozzle mount (001-4714J) to the nozzle holder (001-4703R) with 5/16" U bolts, locks, and nuts. The Nozzle mount should be about 6 inches apart for 4 foot wide balers and 9 inches apart for 5 foot wide balers. Do not fully tighten. Lift the roller baffle and position the end of the nozzle holder bracket so the tips are just above the roller baffle (if equipped) when it is lifted to its highest point. Tighten all hardware and attach the hoses.

Net Only Baler

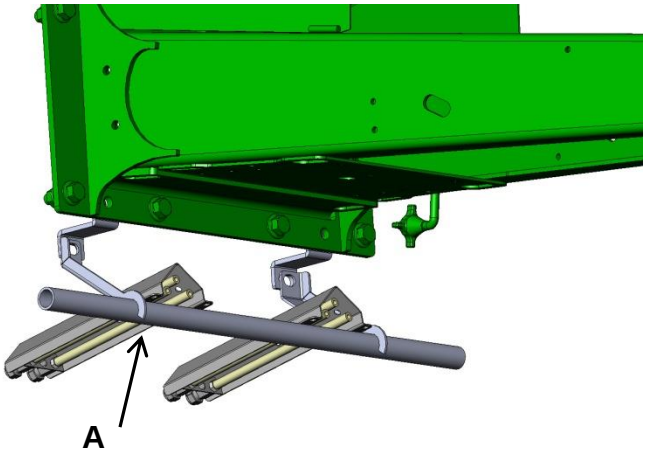

Locate the four flange head bolts where the baler hitch bolts to the bottom side of the baler frame. Remove the two bolts. Attach the spacers (001-4703NS) to the **chamber side** of the baler frame. Use original hardware to secure. Attach the nozzle holder (001-4703R) to the spacers with the supplied M16 x 40mm flange bolts and nuts. Attach the nozzle mount (001-4714J) to the nozzle holder (001-4703R) with 5/16" U bolts, locks and nuts. The nozzle mount should be about 9 inches apart with bracket **A** as close to the V-shaped stop as possible. Do not fully tighten. Lift the roller baffle (if equipped) and position the end of the nozzle holder bracket so the tips are just above the baffle when it is lifted to its highest point. Tighten all hardware and attach the hoses.

3. Installation of gauge, reach rods and hose manifold

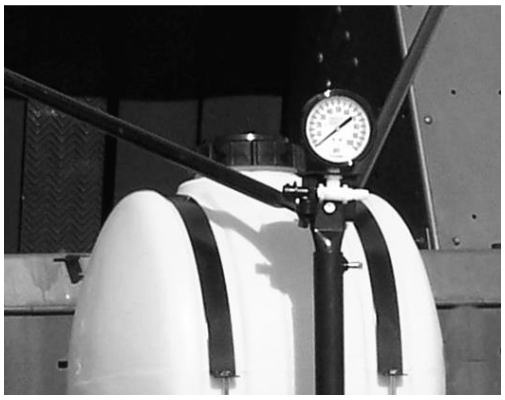

Figure 1

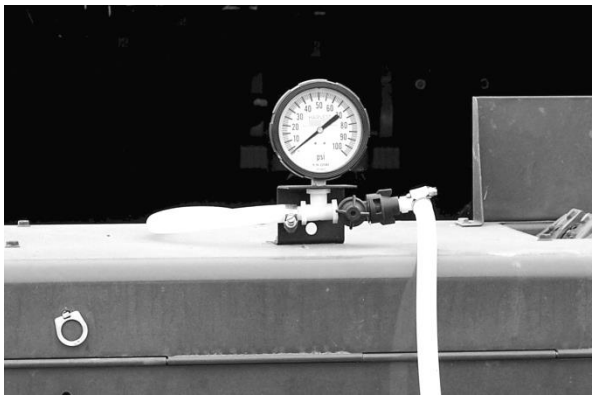

Figure 2

On round balers (Figure 1) locate the pressure gauge and pressure gauge holder in a position so that it is easily viewed from the seat of the tractor. The gauge holder can be used as a joiner for the two top reach rods as pictured here. Connect the reach rods behind the tank at an angle that will properly support the tank and saddle from any movement. **NOTE: REACH RODS MAY HAVE TO BE BENT ON THE TAB TO ALIGN PROPERLY.** On square balers (Figure 2), the gauge is normally best viewed if it is located on the top sheet metal above the pickup head. The gauge is also supplied with an elbow in the parts bag. Use if necessary (small square only). Mount the hose manifold on the front of the baler in the area of the spray shield. Make sure the bracket will not interfere with any baler operations (square balers only).

AGCO & Case IH inline balers

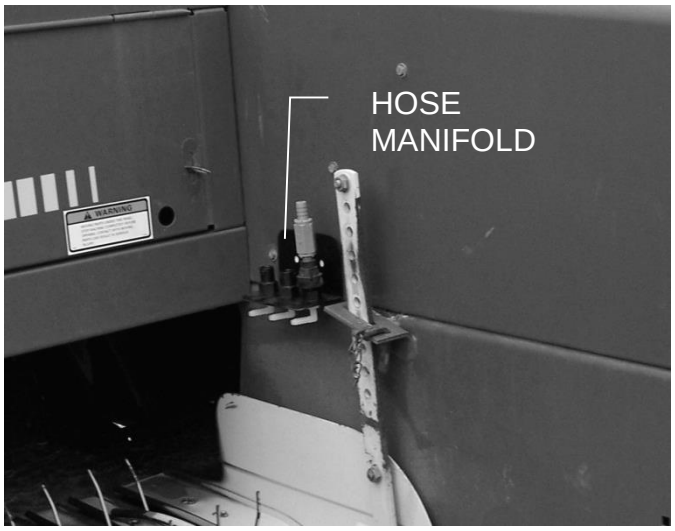

New Holland & Case IH SBX
With 4409 install kit

4. Installation of Drain fill line

Model 432

Using parts bag 1, locate the pre-drilled hole at the front of the bale chamber (figure 1). Secure valve assembly to baler using 5/16” x 3/4" carriage bolts (figure 2). Thread 3/4” elbow fitting into tank, cut hose to correct length and connect to valve assembly. Secure with hose clamps on both ends (figure 3).

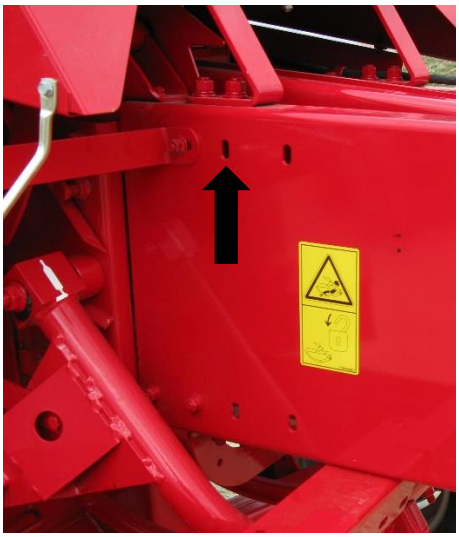

Figure 1

Figure 2

Figure 3

Model 438

Locate parts bag 1. Thread 3/4" elbow fitting into end of tank. (003-EL3434) Run 3/4" hose from the elbow down the frame to the bottom of the baler. Drill 1/4" holes to accept the valve holder bracket and use 5/16” x1” self-tapping screws and flange nuts. Connect valve assembly to other end of hose. Place hose clamps on both ends. Secure hose to frame using zip ties**.**

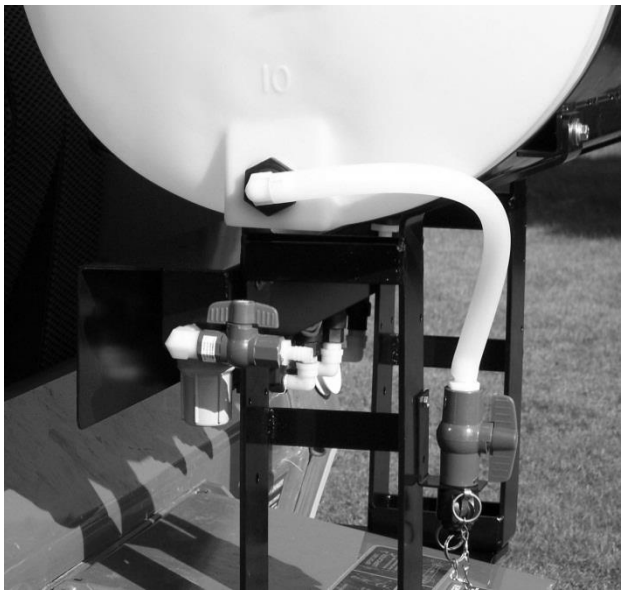

5. Installation of plumbing

Model 432

Mount the pump on right leg in pre-drilled holes as shown below. Mount the pump with the intake facing down and wrap the cords underneath the pump to prevent any damage or stress to them. Route hose from regulator to side tank fitting.

Model 438

Mount the pump either of the legs. Take care to mount the pump with the intake facing down and wrap the cords underneath the pump to prevent any damage or stress to them.

Mount the gauge assembly as shown below. Make sure your gauge placement will be easy to see from the operator's platform and does not interfere with normal baling conditions. Install the plumbing as follows:

A. Intake
Screw the 003-A3412 (3/4" to 1/2" Adapter) into the bottom of the tank. Second screw the 002-2212(½" ball valve) with elbow into the filter assembly. Lastly, route the 005-9001(1/2" hose) from bottom of the tank to ball valve. Secure with hose clamps.

B. Regulator
Screw elbow 003-EL3412 into the side tank fitting and connect the ½" hose between the elbow and the check valve from the regulator with the hose clamps.

C. Outlet
Run hose from the pump outlet to the gauge. The gauge is assembled with two straight fittings; an elbow is supplied in the parts bag to be used if necessary. From the gauge the hose will need to be run to the hose manifold. Cut the hose to length and attach the check valve (002-4564X) and female coupler (004-1207H) to the hose manifold. Use supplied caps (004-1207F) to cover remaining female disconnects (004-1207G).

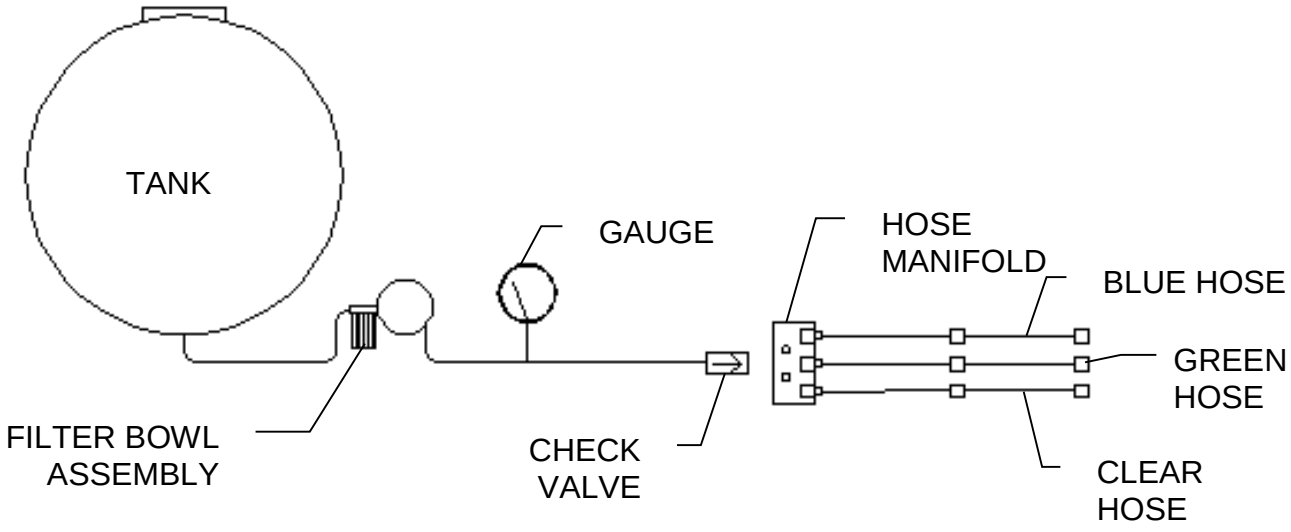

Model 439

A. Intake

Screw the 003-EL3412 (3/4" to 1/2"elbow) into the bottom of the tank. Second screw the 002-2212(1/2" ball valve) with elbow into the filter assembly. Lastly, route the 002-9001(1/2" hose) from bottom of the tank to ball valve. Secure with hose clamps. See picture below.

B. Regulator

Screw elbow 003-EL3412 into the side tank fitting and connect the 1/2" hose between the elbow and the check valve from the regulator with the hose clamps.

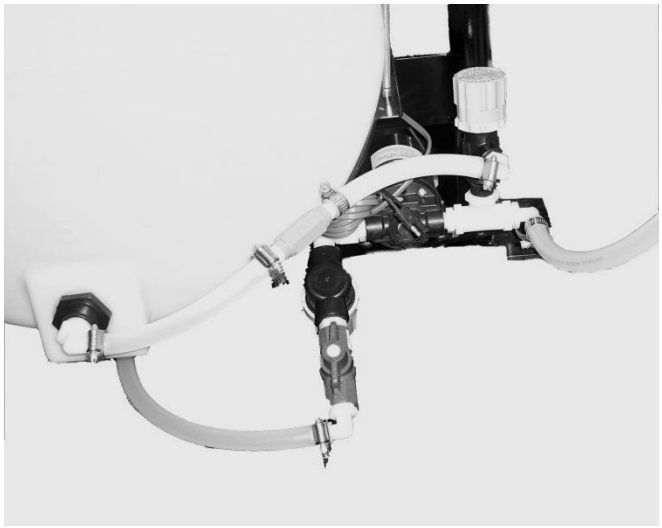

C. Outlet with install 4409 and 4410

Run hose from the pump outlet to the gauge. The gauge is assembled with two straight fittings; an elbow is supplied in the parts bag to be used if necessary. From the gauge the hose will need to be run to the hose manifold. Cut the hose to length and attach the check valve (002-4564X) and female coupler (004-1207H) to the hose manifold. Use the supplied caps (004-1207F) to cover the remaining female disconnects (004-1207G).

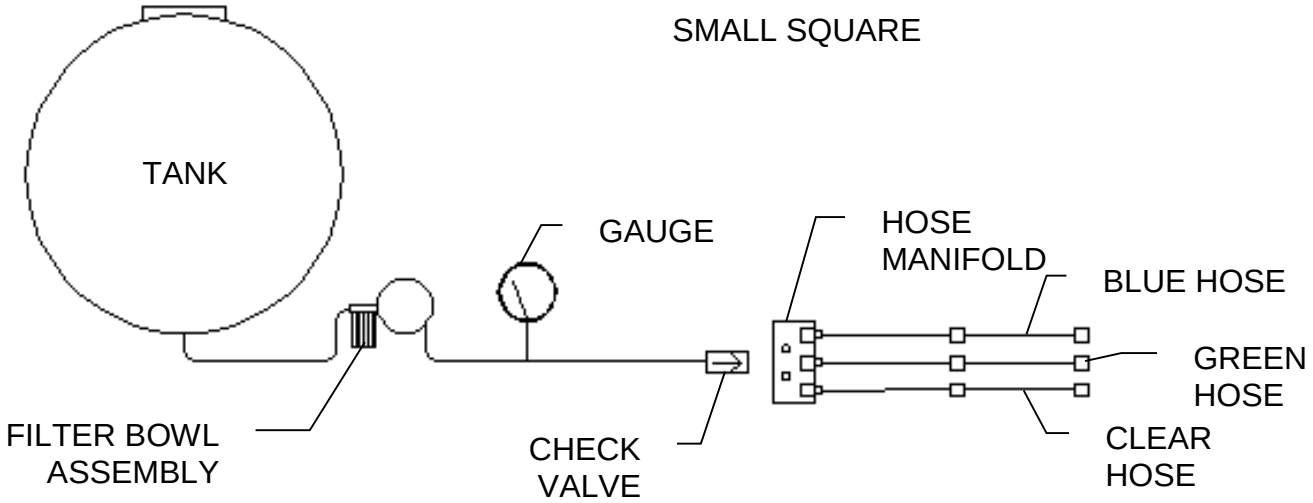

D. Outlet with install 4415

Run hose from the pump outlet to the gauge. The gauge is assembled with two straight fittings; an elbow is supplied in the parts bag to be used if necessary. From the gauge the hose will need to be run to the spray shield.

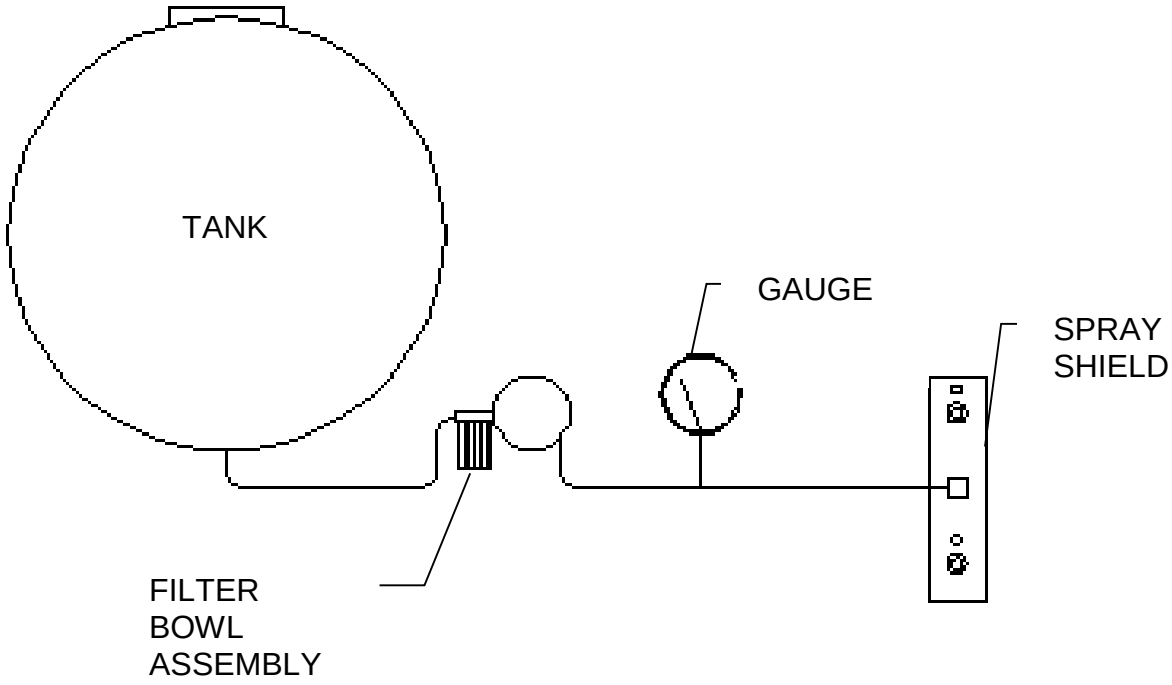

E. Outlet round baler

Run hose from the pump outlet to the gauge. The gauge is assembled with two straight fittings; an elbow is supplied in the parts bag to be used if necessary. From the gauge the hose will need to be run to the first nozzle tube with the check valve. On John Deere 8 series balers the hose from the gauge will go the check valve on the spray shield. Cut the hose to length and attach the female disconnect and straight fitting. Attach these to the check valve using one washer.

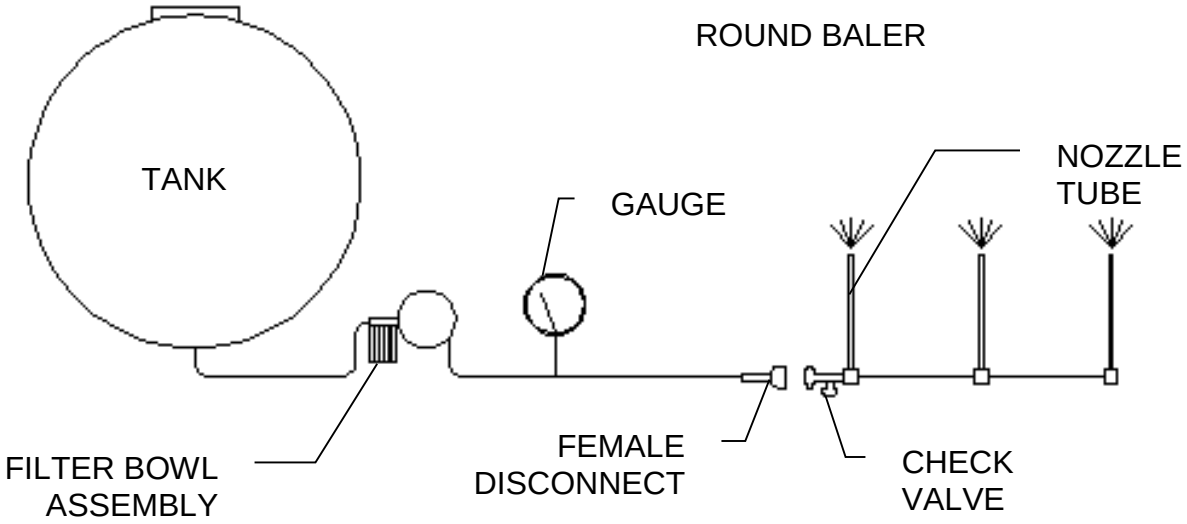

Model 432 Base Kit

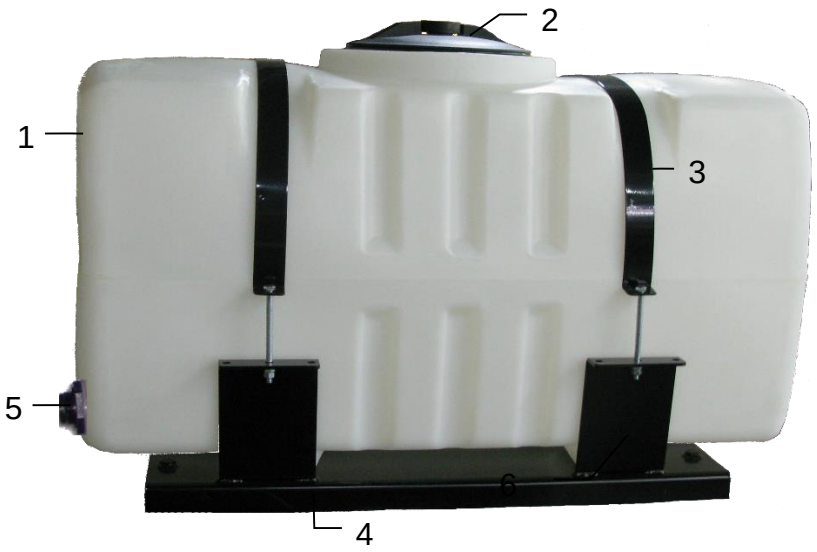

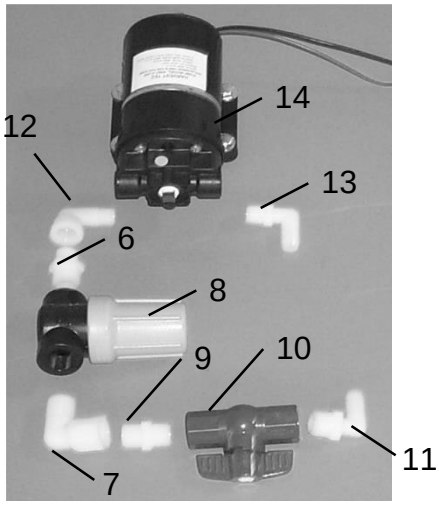

Ref	Description	Part#	Qty	Ref	Description	Part#	Qty
1	Tank	005-9203SQ	1	8	Filter bowl	002-4315-80	1
2	Tank lid	005-9022H	1	9	Nipple	003-M1212	1
3	Tank straps	001-4402	2	10	Ball valve	002-2212	1
4	Tank Saddle	001-4703X	1	11	Elbow	003-EL1212	1
5	Tank fitting	005-9100	2	12	Elbow	003-SE38	1
6	Nipple	003-M1238	1	13	Elbow	003-EL3812	1
7	Elbow	003-SE12	2	14	Pump	007-4120S	1

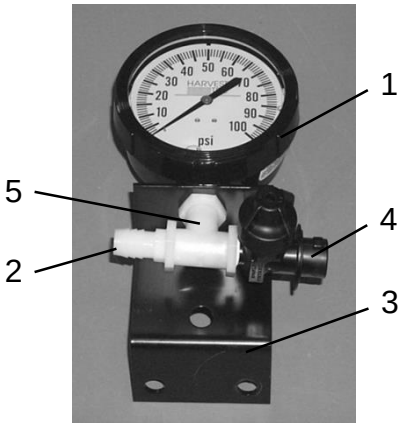

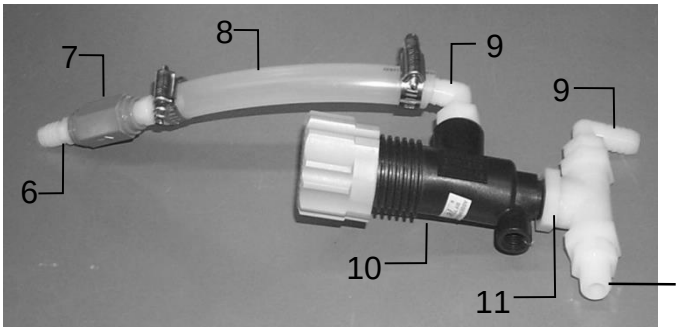

Ref #	Description	Part #	Qty	Ref #	Description	Part #	Qty
1	Gauge	002-2208Z	1	8	1/2" EVA Tubing	002-9001	21
2	Straight Fitting	003-A1212	1	9	Elbow Fitting	003-EL1212	3
3	Gauge Bracket	001-4714	1	10	Regulator	002-4716	1
4	Check Valve	004-1207V	1	11	Tee	002-TT12	1
5	Tee	004-TT14	1	12	Nipple	003-M1238	2
6	Straight Fitting	003-A1412	4				
7	Check Valve	002-4564F	1				

Model 438 Base Kit

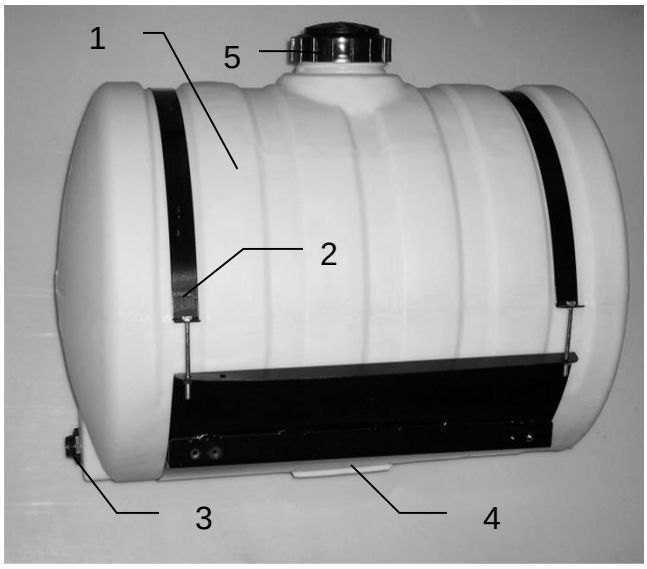

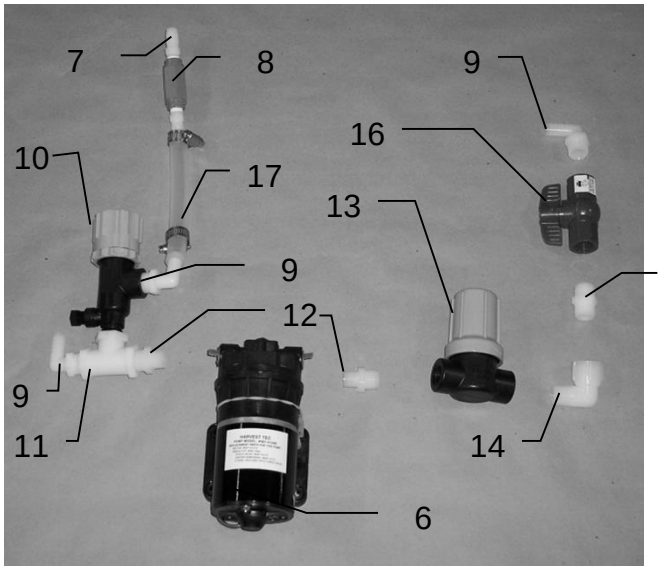

Ref	Description	Part #	Qty	Ref	Description	Part #	Qty
1	Tank	005-9203	1	11	Tee	003-TT12	1
2	Straps	001-4402	2	12	Nipple fitting	003-M1238	2
3	Tank fitting	005-9100	3	13	Filter bowl assembly	002-4315	1
4	Saddle	001-4703	1	14	Street elbow	003-SE12	1
5	Tank cap	005-9022C	1	15	Nipple fitting	003-M1212	1
	Tank gasket	005-9022CG	1	16	Ball valve	002-2212	1
6	Pump	007-4120S	1	17	Hose clamp	003-9003	2
7	Straight fitting	003-A1412	2	NP	Elbow fitting	003-EL3412	1
8	Check valve	002-4564F	1	NP	Straight fitting	003-A3412	1
9	Elbow fitting	003-EL1212	3	NP	Switch assembly	030-4724	1
10	Regulator	002-4716	1	NP	Not pictured		

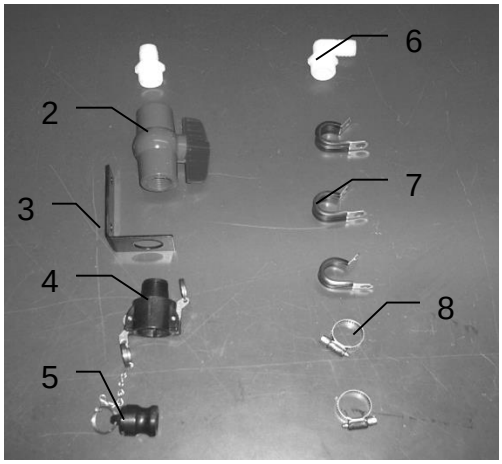

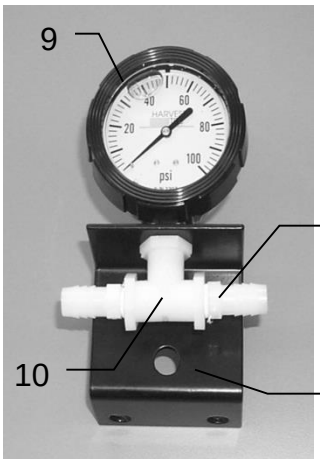

Ref	Description	Part #	Qty	Ref	Description	Part #	Qty
1	Straight fitting	003-A3434	1	10	Tee	003-TT14	1
2	Ball valve	002-2200	1	11	Straight Fitting	003-A1412	2
3	Valve holder	001-6702H	1	12	Gauge Bracket	001-4714	1
4	Female coupler	002-2204A	1	NP	Hose Clamp	003-9003	7
5	Male shut-off	002-2205G	1	NP	Pump Lead	006-4574	1
6	Elbow fitting	003-EL3434	1	NP	1/2" Hose	002-9001	20
7	Jiffy clip	008-9010	3	NP	3/4" Hose	002-9002	6
8	Hose clamp	003-9004	2	NP	Jiffy clip	008-9009	2
9	Gauge	002-2207Z	1	NP	Not Pictured		

Model 439 Base Kit

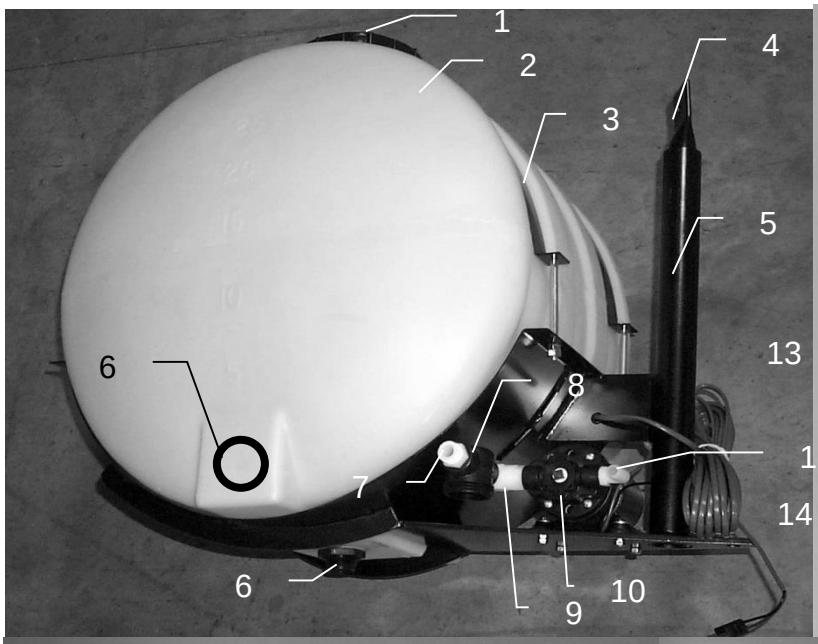

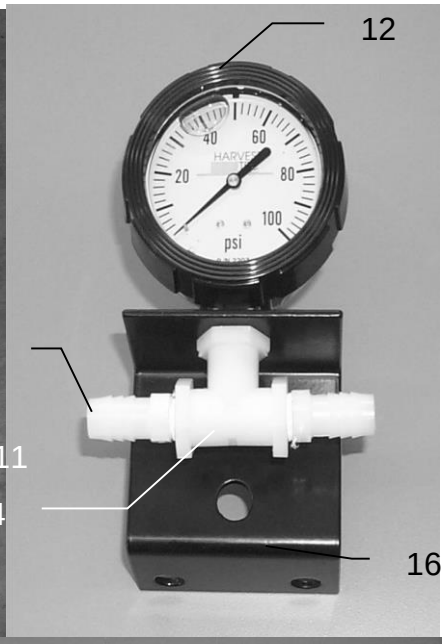

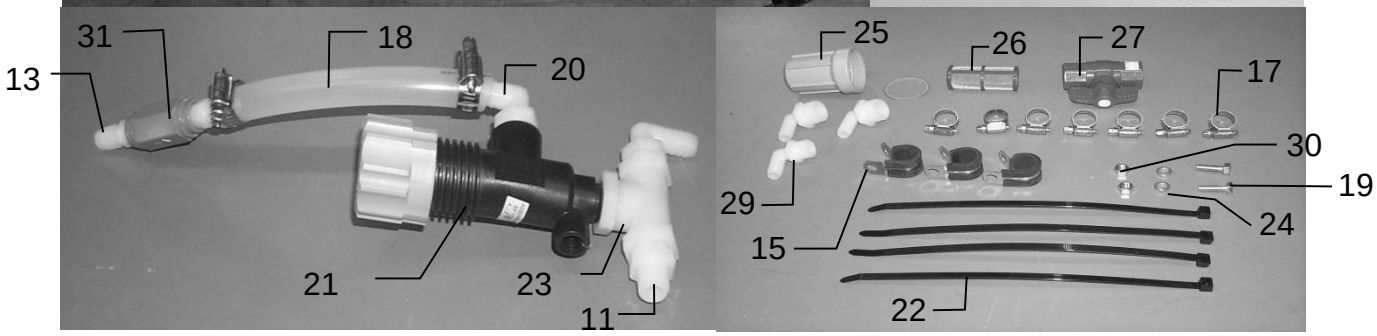

Ref	Description	Part #	Qty	Ref	Description	Part#	Qty
1	Tank lid 2000 or newer	005-9022C	1	16	Gauge bracket	001-4717	1
	Tank lid 1999 or older	005-9022A	1	17	Hose clamp	003-9003	9
2	25 gallon tank	005-9002	1	18	1/2” EVA tubing	002-9001	21
3	Tank straps	001-4402	2	19	5/16”x1” bolts		
4	Stub pipe	001-4403	1	20	Elbow fitting	003-EL1212	3
5	25 gallon saddle	001-4401	1	21	Regulator	002-4716	1
6	Tank fitting	005-9100	1	22	Cable ties		4
7	Nipple	003-M1212	1	23	Tee	002-TT12	1
8	Filter bowl	002-4315	1	24	5/16” lock		
9	Elbow fitting	003-SE12	1	25	Filter bowl only	003-4315F	1
10	Pump	007-4120S	1	26	Filter bowl screen	003-4315B	1
11	Nipple	003-M1238	2	27	Ball Valve	002-2212	1
12	Gauge	002-2207Z	1	28	Hose clamp	003-9003	9
13	Straight fitting	003-A1412	4	29	Elbow fitting	003-EL3412	2
14	Tee fitting	003-TT14	1	30	5/16” nuts		
15	Jiffy clips	008-9010	3	31	Check valve	002-4564F	1

Model 4409 Installation Kit

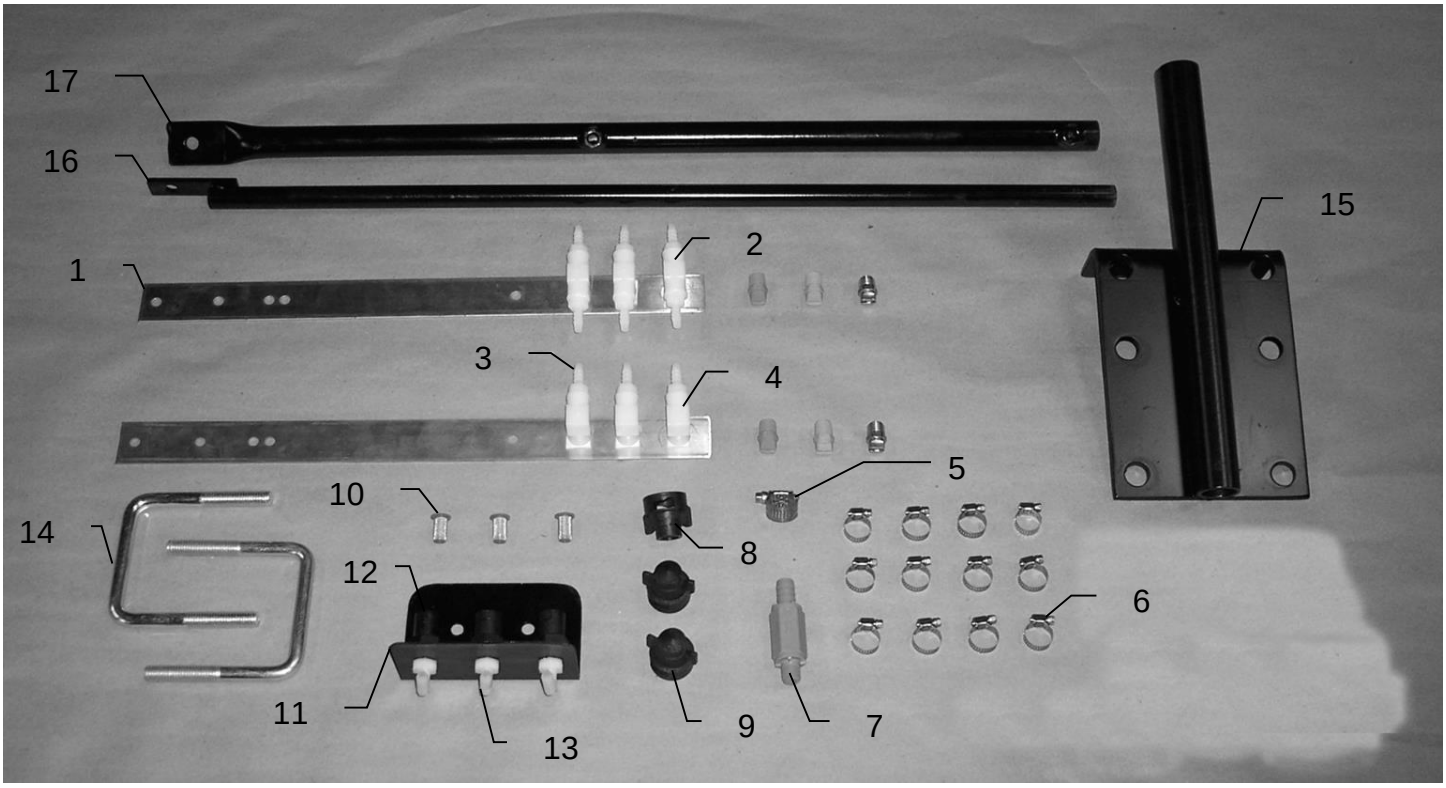

Ref	Description	Part#	Qty	Description	Part#	Qty
1	Nozzle strap	001-4215	2	Tip	004-T650050-SS	2
2	Tee	003-TT14SQ	3	Tip	004-T6501-PT	2
3	Straight fitting	003-A1414	9	Tip	004-T6502-PT	2
4	Elbow	003-SE14F	3	Washer	004-1207W	3
5	Hose clamp	003-9003	1	Hose	002-9016	9 ft
6	Hose clamp	003-9002	12			
7	Check valve	002-4564X	1			
8	Female disconnect	004-1207H	1			
9	Shutoff cap	004-1207F	2			
10	Tip screen	004-1203-200	3			
11	Hose manifold	001-4720	1			
12	Female coupler	004-1207G	3			
13	Elbow	003-EL1414	3			
14	U bolt	001-4406A	2			
15	Mounting manifold	001-4406	1			
16	Inside reach rod	001-4405	1			
17	Outside reach rod	001-4404	1			

Model 4410 Installation Kit

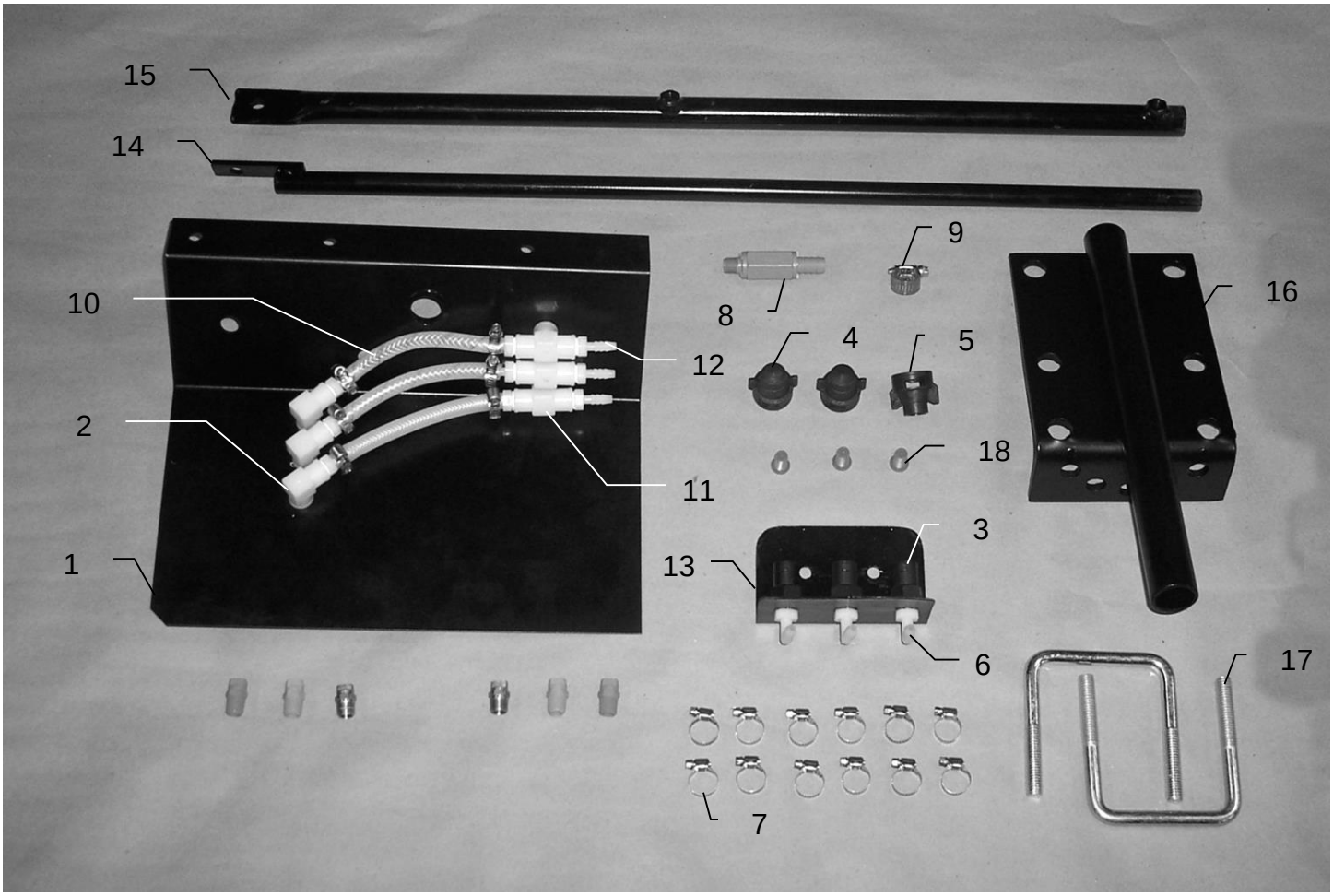

Ref	Description	Part#	Qty
1	Spray shield	001-4426	1
2	Elbow	003-SE14F	3
3	Female coupler	004-1207G	3
4	Shutoff cap	004-1207F	2
5	Female discount	004-1207H	1
6	Elbow	003-EL1414	3
7	Hose clamp	003-9002	12
8	Check valve	002-4564X	1
9	Hose clamp	003-9003	1
10	Hose	002-9016	9 ft
11	Tee	003-TT14SQ	3
12	Straight fitting	003-A1414	9
13	Hose manifold	001-4720	1
14	Inside reach rod	001-4405	1
15	Outside reach rod	001-4404	1
16	Mounting bracket	001-4406	1
17	U bolt	001-4406A	2
18	Tip strainer	004-1203-200	3

	Description	Part#	Qty
NP	Tip	004-T650050-SS	2
NP	Tip	004-T6501-PT	2
NP	Tip	004-T6502-PT	2
NP	Washer	004-1207W	3
NP	Not pictured		

Model 4415 Installation Kit

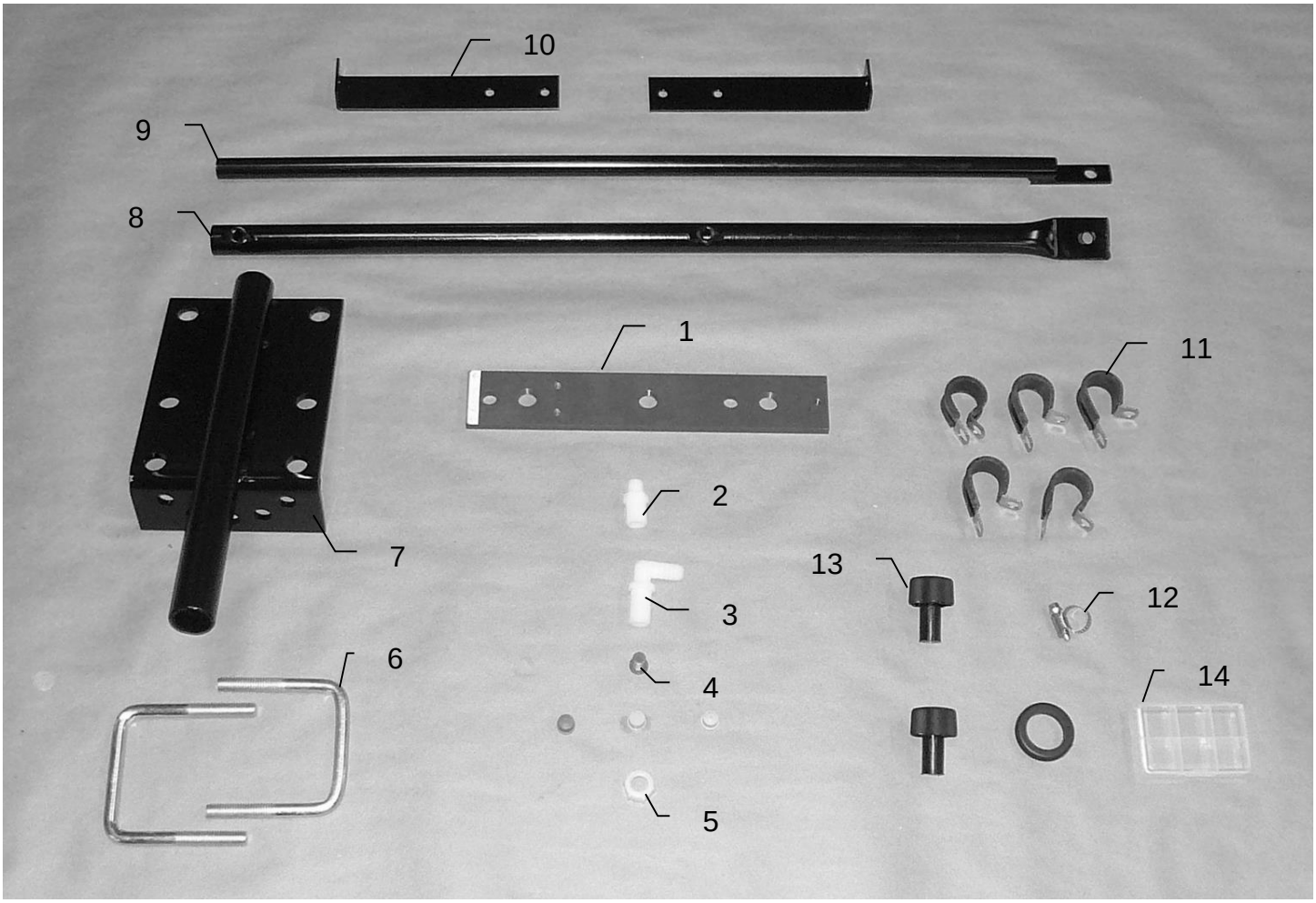

Ref	Description	Part#	Qty	Description	Part#	Qty
1	Spray shield	001-4425C	1	Tip	004-30HCX6	1
2	Drill guide	003-M3814NB	1	Tip	004-30HCX12	1
3	Elbow	003-EL3812NB	1	Tip	004-30FCX02	1
4	Tip strainer	004-4213-100	1			
5	Nozzle cap	003-BC12	1			
6	U bolt	001-4406A	2			
7	Mounting bracket	001-4406	1			
8	Outside reach rod	001-4404	1			
9	Inside reach rod	001-4405	1			
10	Bracket	001-4425B	2			
11	Jiffy clip	008-9010	5			
12	Hose clamp	003-9003	1			
13	Knob	008-0925	2			
14	Tip box	009-9001	1			

Model 4416 Installation Kit

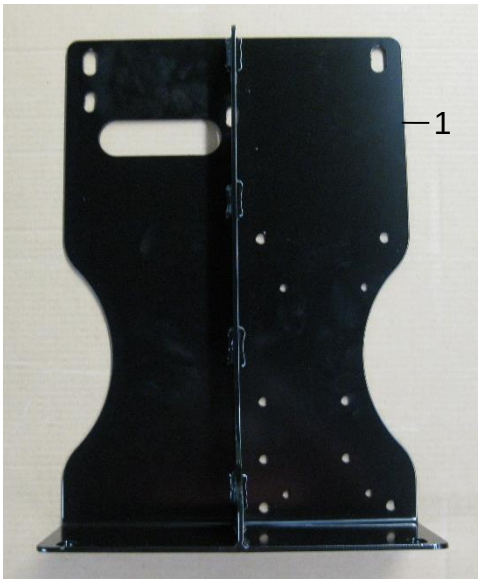

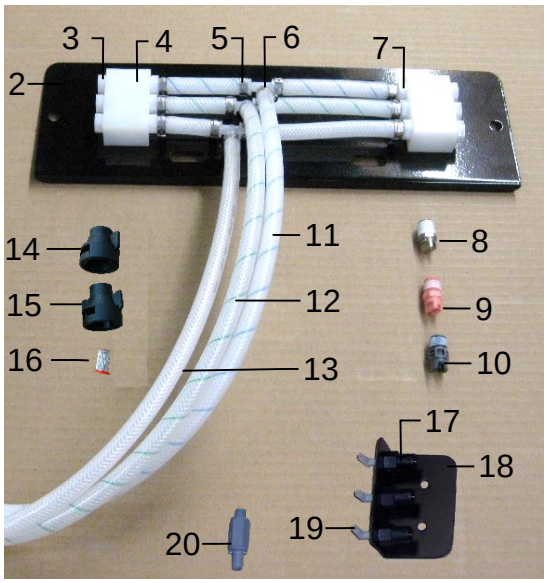

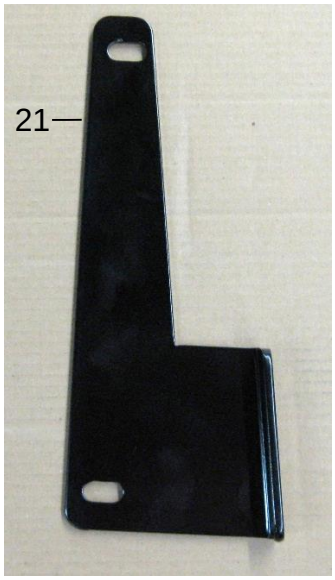

Ref	Description	Part #	Qty	Ref	Description	Part#	Qty
1	Saddle Legs	001-4703Q	2	14	1/4" Female Disconnect	004-1207H	1
2	Spray Shield	001-4424A2	1	15	Shut off cap	004-1207F	2
3	Plug	003-F14	6	16	Tip Strainer (200 mesh)	004-1203-200	3
4	Manifold Block	001-4435NSB	2	17	Female coupler	004-1207G	3
5	1/2” Otiker Clamp	003-9008	15	18	Hose bracket	001-4720	1
6	1/4" Tee	003-T1414	3	19	Elbow	003-EL1414	6
7	1/4" Straight fitting	003-A1414	3	20	Check valve	002-4564X	1
8	Stainless Tip (small)	004-T650050-SS	2	21	Kicker Bracket	001-4703QC	1
9	Pink Tip (med)	004-T6501-PT	2	NP	Spray Shield Holders	001-4424B	2
10	Orange Tip (large)	004-T6502-PT	2	NP	Mini Hose Clamp	003-9002	3
11	1/4" Hose (green)	002-9016G	4	NP	Hose Clamp #6	003-9003	1
12	1/4" Hose (blue)	002-9016B	4				
13	1/4" Hose (clear)	002-9016	4				

Model 4483 Installation Kit

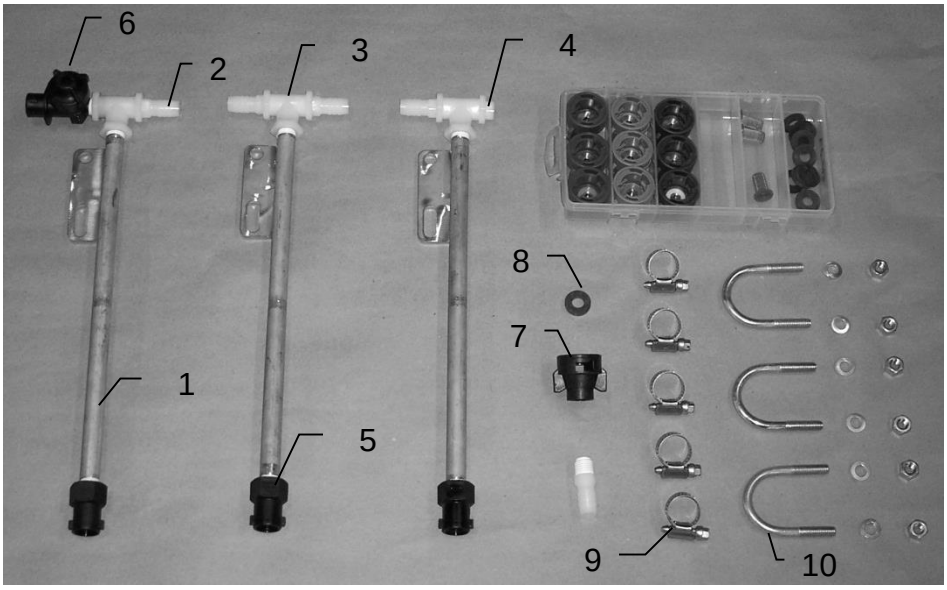

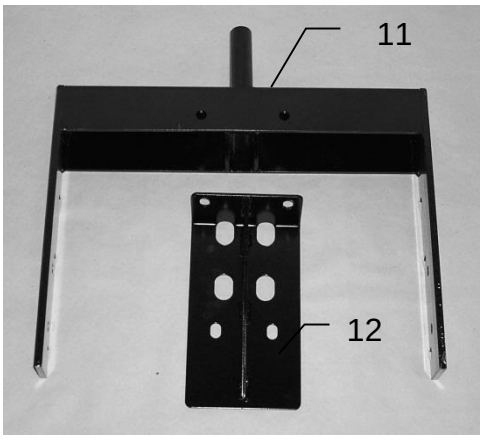

Ref	Description	Part #	Qty
1	Nozzle tube	001-4714	3
2	Straight fitting	003-A1412	5
3	Tee	003-TT14	3
4	Plug	003-F14	1
5	Nozzle Body	004-1207G	3
6	Check valve	004-1207V	1
7	Female disconnect	004-1207H	1
8	Washer	004-1207W	1
9	Hose clamp	003-9003	5
10	U-Bolt	001-4714UBS	3
11	Mounting brkt	001-4411	1
12	Support bracket	001-4411A	1

Description	Part#	Qty
Tip Kit (Complete)	030-9002	1
Tip Kit Includes:		
Plastic Box	008-9000	1
Red Cap	004-1207B	3
Outside Tip (Red Set)	004-650050-SS	2
Inside Tip (Red Set)	004-XR11001VS	1
Green Cap	004-1207A	3
Outside Tip (Green Set)	004-6501-SS	2
Inside Tip (Green Set)	004-XR110015VS	1
Blue Cap	004-1207C	3
Outside Tip (Blue Set)	004-6502-SS	2
Inside Tip (Blue Set)	004-XR11002VS	1
Washer	004-1207W	9
Tip Strainer	004-1203-100	3

Model 4484 Installation Kit

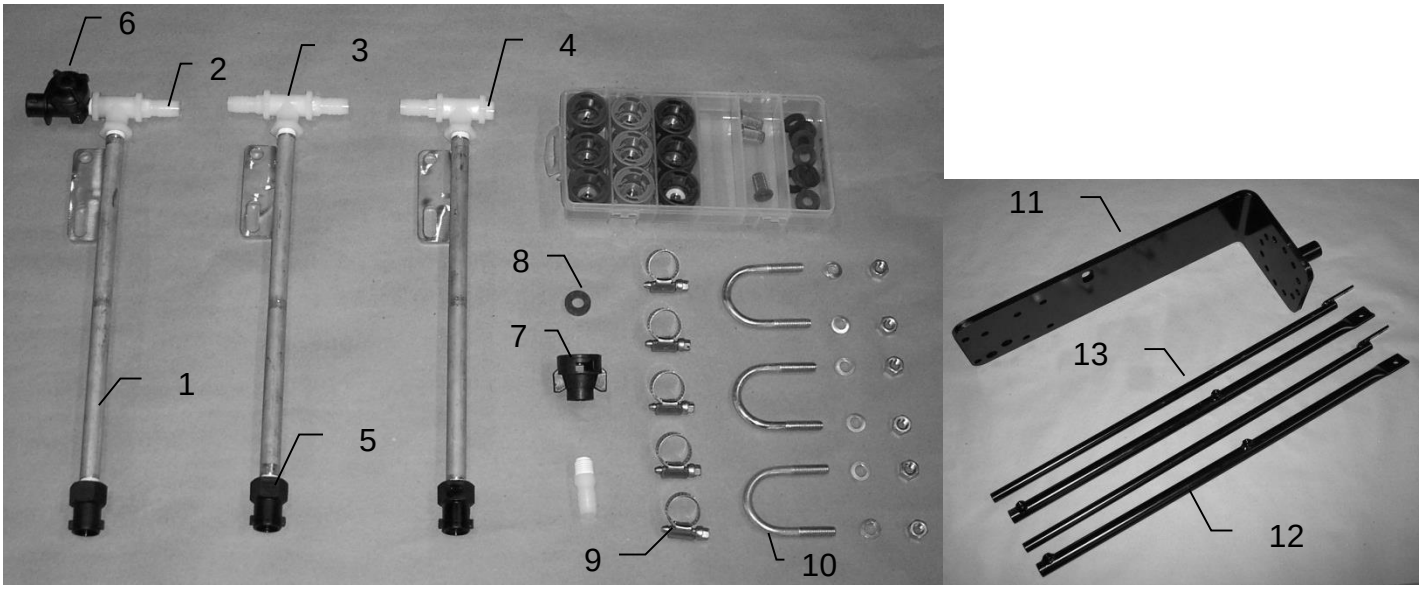

Ref	Description	Part #	Qty
1	Nozzle tube	001-4714	3
2	Straight fitting	003-A1412	5
3	Tee	003-TT14	3
4	Plug	003-F14	1
5	Nozzle Body	004-1207G	3
6	Check valve	004-1207V	1
7	Female disconnect	004-1207H	1
8	Washer	004-1207W	1
9	Hose clamp	003-9003	5
10	U-Bolt	001-4714UBS	3
11	Mounting bracket	001-4418	1
12	Outside reach rod	001-4404	2
13	Inside reach rod	001-4405	2

Description	Part#	Qty
Tip Kit (Complete)	030-9002	1
Tip Kit Includes:		
Plastic Box	008-9000	1
Red Cap	004-1207B	3
Outside Tip (Red Set)	004-650050-SS	2
Inside Tip (Red Set)	004-XR11001VS	1
Green Cap	004-1207A	3
Outside Tip (Green Set)	004-6501-SS	2
Inside Tip (Green Set)	004-XR110015VS	1
Blue Cap	004-1207C	3
Outside Tip (Blue Set)	004-6502-SS	2
Inside Tip (Blue Set)	004-XR11002VS	1
Washer	004-1207W	9
Tip Strainer	004-1203-100	3

Model 4485 Installation Kit

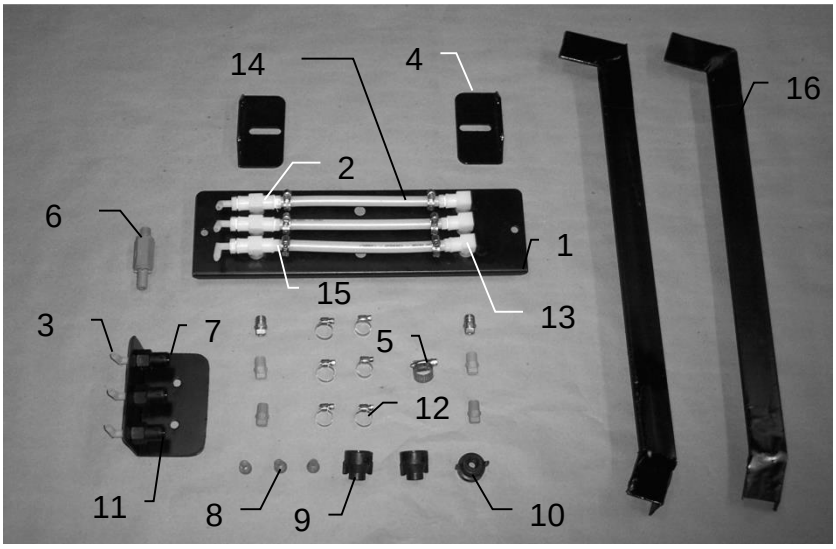

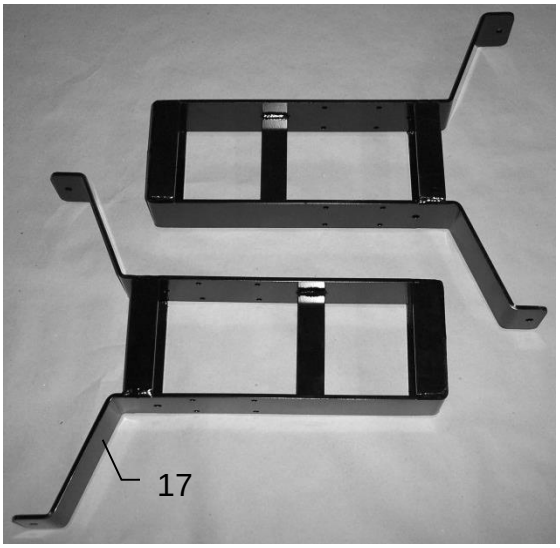

Ref	Description	Part#	Qty
1	Spray shield	001-4424A	1
2	Tee	003-TT14SQ	3
3	Elbow	003-EL1414	6
4	Shield holder	001-4424B	2
5	Hose clamp	003-9003	1
6	Check valve	002-4564X	1
7	Hose bracket	001-4720	1
8	Tip strainer	004-1203-200	3
9	Shutoff cap	004-1207F	2
10	Female discount	004-1207H	1
11	Female coupler	004-1207G	3
12	Hose clamp	003-9002	12
13	Elbow	003-SE14F	3
14	Hose	002-9016	9 ft
15	Straight fitting	003-A1414	3
16	Leg supports	001-4424C	2
17	Saddle leg	001-4703B	2

Ref	Description	Part#	Qty
NP	Tip	004-T650050-SS	2
NP	Tip	004-T6501-PT	2
NP	Tip	004-T6502-PT	2
NP	Washer	004-1207W	3
NP	Not pictured		

Model 4486 Installation Kit

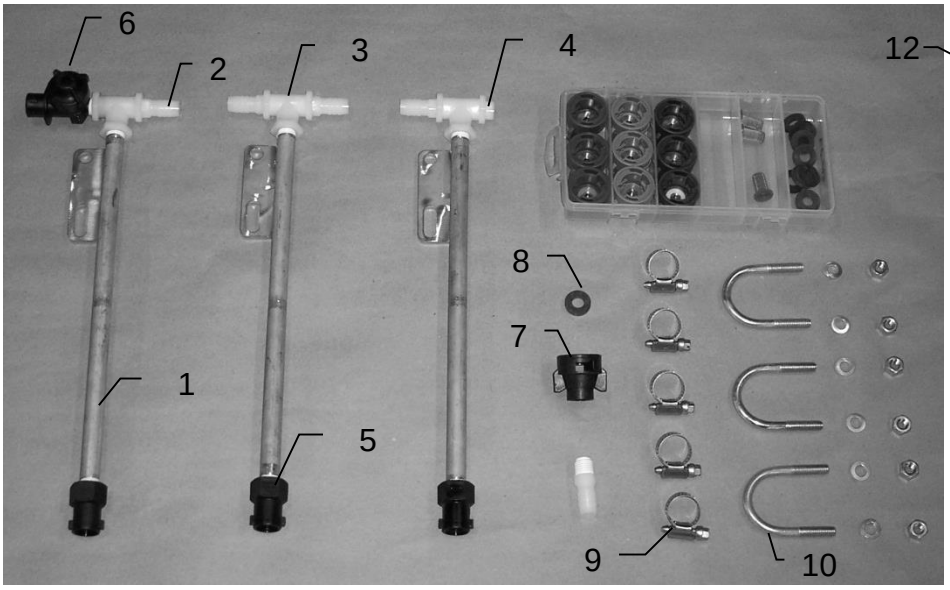

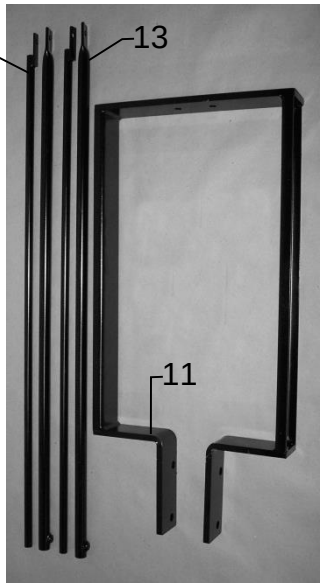

Ref	Description	Part #	Qty
1	Nozzle tube	001-4714	3
2	Straight fitting	003-A1412	5
3	Tee	003-TT14	3
4	Plug	003-F14	1
5	Nozzle Body	004-1207G	3
6	Check valve	004-1207V	1
7	Female disconnect	004-1207H	1
8	Washer	004-1207W	1
9	Hose clamp	003-9003	5
10	U-Bolt	001-4714UBS	3
11	Mounting bracket	001-4420	1
12	Outside reach rod	001-4404A	2
13	Inside reach rod	001-4405A	2

Description	Part#	Qty
Tip Kit (Complete)	030-9002	1
Tip Kit Includes:		
Plastic Box	008-9000	1
Red Cap	004-1207B	3
Outside Tip (Red Set)	004-650050-SS	2
Inside Tip (Red Set)	004-XR11001VS	1
Green Cap	004-1207A	3
Outside Tip (Green Set)	004-6501-SS	2
Inside Tip (Green Set)	004-XR110015VS	1
Blue Cap	004-1207C	3
Outside Tip (Blue Set)	004-6502-SS	2
Inside Tip (Blue Set)	004-XR11002VS	1
Washer	004-1207W	9
Tip Strainer	004-1203-100	3

Model 4516 Installation Kit
FOR JOHN DEERE 8 & 9 SERIES ROUND BALERS

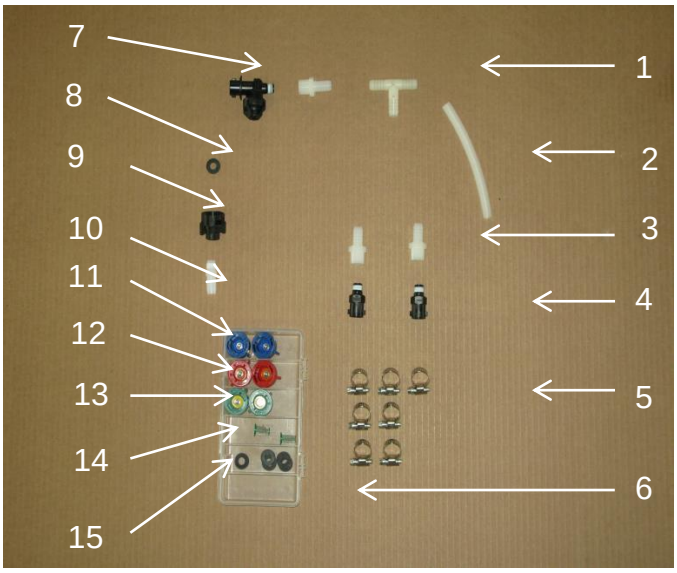

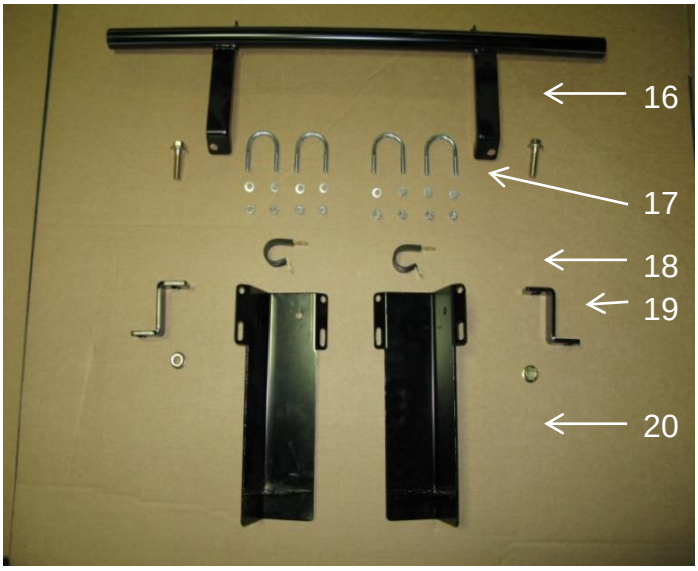

Ref	Description	Part #	Qty	Ref	Description	Part #	Qty
1	Tee	003-T1212	1	14	Strainer	004-1203-100	2
2	Hose	002-9001	4 ft	15	Rubber Washer	004-1207W	6
3	Fitting	003-A1412F	3	16	Nozzle Holder	001-4703R	1
4	Fitting	004-4710	2	17	5/16” U-bolt	001-4714UBS	4
5	Hose Clamps	003-9003	7	18	Jiffy Clips	008-9009	2
6	PLANO BOX	008-9000	1	19	Spacer	001-4703NS	2
7	Check Valve	004-1207V	1	20	Nozzle Mount	001-4714J	2
8	Rubber Washer	004-1207W	6	21	Mounting Bracket	001-4411	1
9	Coupler	004-1207H	1	22	Support	001-4411A	1
10	Fitting	003-A1412	1				
11	Cap-blue	004-1207C	2	11a	TIP-blue	004-XR11003VS	2
12	Cap-red	004-1207B	2	12a	TIP-orange	004-XR11001VS	2
13	Cap-green	004-1207A	2	13a	TIP-yellow	004-XR11002VS	2

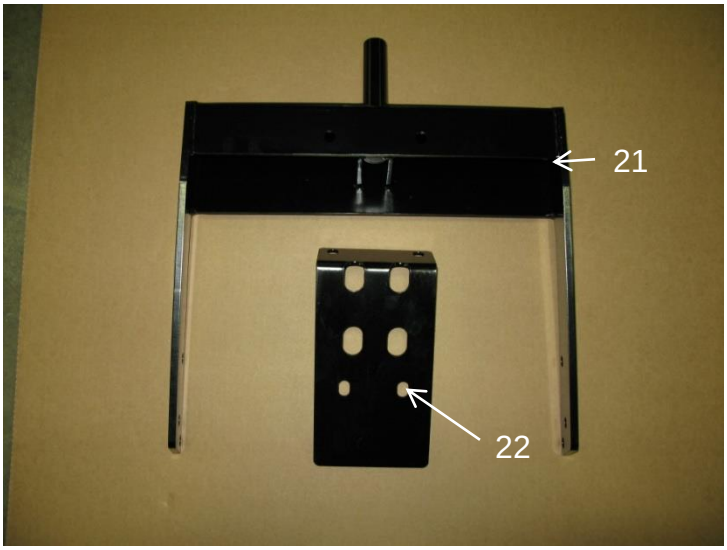

Model 4400C Installation Kit

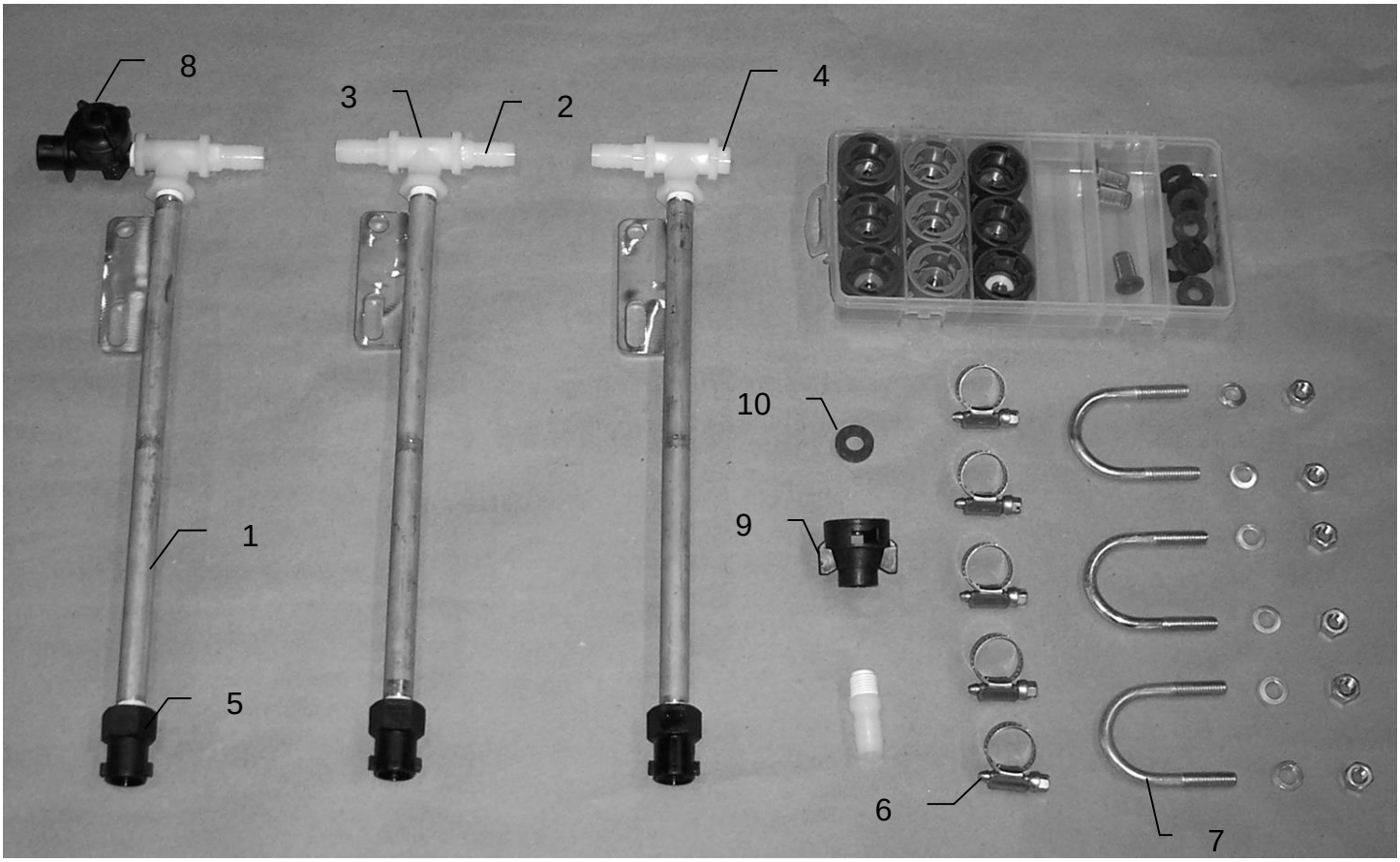

Ref	Description	Part#	Qty
1	Nozzle tube	001-4714	3
2	Straight fitting	003-A1412	5
3	Tee	003-TT14	3
4	Plug	003-F14	1
5	Nozzle Body	004-1207G	3
6	Hose clamp	003-9003	5
7	U-Bolt	001-4714UBS	3
8	Check valve	004-1207V	1
9	Female disconnect	004-1207H	1
10	Washer	004-1207W	1

Description	Part#	Qty
Tip Kit (Complete)	030-9002	1
Tip Kit Includes:		
Plastic Box	008-9000	1
Red Cap	004-1207B	3
Outside Tip (Red Set)	004-650050-SS	2
Inside Tip (Red Set)	004-XR11001VS	1
Green Cap	004-1207A	3
Outside Tip (Green Set)	004-6501-SS	2
Inside Tip (Green Set)	004-XR110015VS	1
Blue Cap	004-1207C	3
Outside Tip (Blue Set)	004-6502-SS	2
Inside Tip (Blue Set)	004-XR11002VS	1
Washer	004-1207W	9
Tip Strainer	004-1203-100	3

← KNIFE

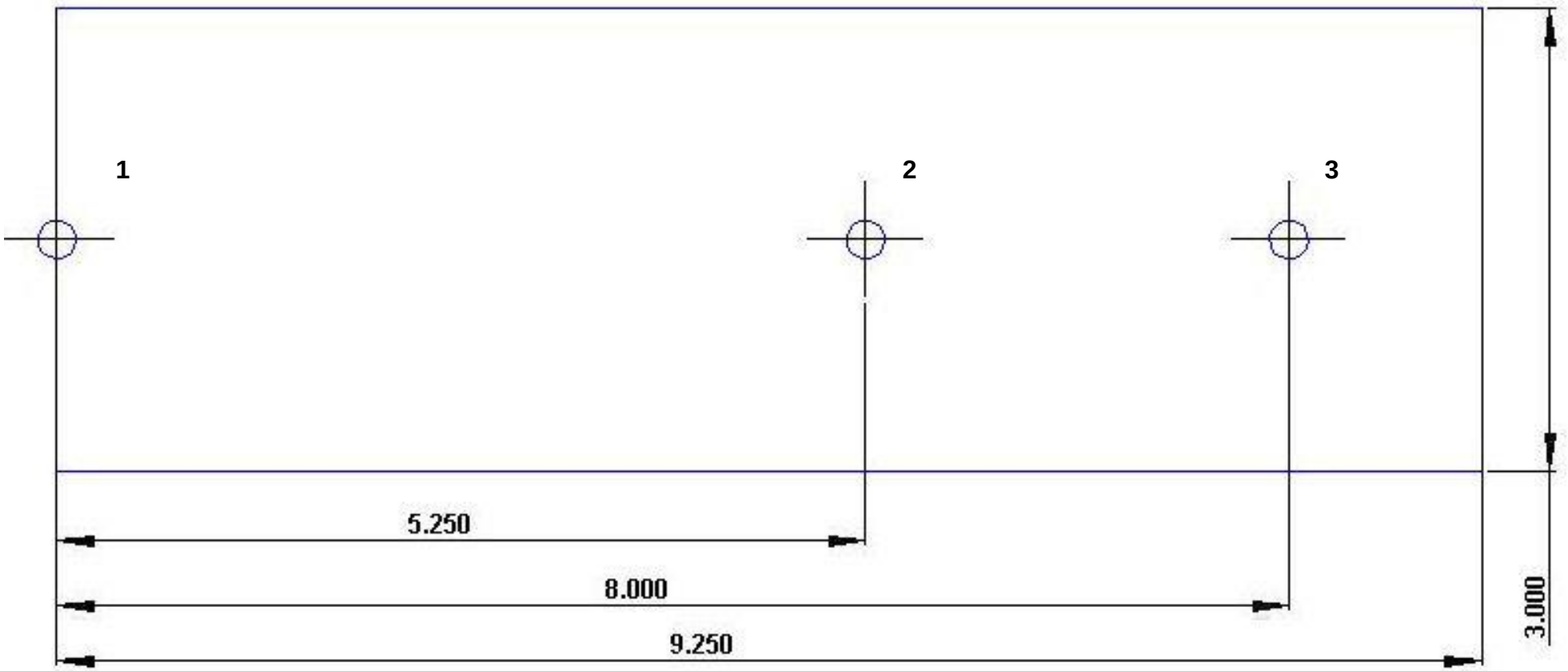

4415 Spray shield template

WARRANTY AND LIABILITY AGREEMENT

Harvest Tec, Inc. will repair or replace components that are found to be defective within 12 months from the date of manufacture. Under no circumstances does this warranty cover any components which in the opinion of Harvest Tec, Inc. have been subjected to negligent use, misuse, alteration, accident, or if repairs have been made with parts other than those manufactured and obtainable from Harvest Tec, Inc.

Our obligation under this warranty is limited to repairing or replacing free of charge to the original purchaser any part that in our judgment shows evidence of defective or improper workmanship, provided the part is returned to Harvest Tec, Inc. within 30 days of the failure. Parts must be returned through the selling dealer and distributor, transportation charges prepaid.

This warranty shall not be interpreted to render Harvest Tec, Inc. liable for injury or damages of any kind, direct, consequential, or contingent, to persons or property. Furthermore, this warranty does not extend to loss of crop, losses caused by delays or any expense prospective profits or for any other reason. Harvest Tec, Inc. shall not be liable for any recovery greater in amount than the cost or repair of defects in workmanship.

There are no warranties, either expressed or implied, of merchantability or fitness for particular purpose intended or fitness for any other reason.

This warranty cannot guarantee that existing conditions beyond the control of Harvest Tec, Inc. will not affect our ability to obtain materials or manufacture necessary replacement parts.

Harvest Tec, Inc. reserves the right to make design changes, improve design, or change specifications, at any time without any contingent obligation to purchasers of machines and parts previously sold.

Revised 01/13

HARVEST TEC, INC.
P.O. BOX 63
2821 HARVEY STREET
HUDSON, WI 54016
PHONE: 715-386-9100
1-800-635-7468
FAX: 715-381-1792
Email: info@harvesttec.com