Installation Manual

Model 602BB

Microwave Moisture Bale Chute System
Case LB & New Holland BB Balers

HARVEST TEC

Equipment and Products for Quality Hay.™

P.O. Box 63 • 2821 Harvey Street • Hudson, WI 54016
800-635-7468 • www.harvesttec.com

602BB-CNH-17-INST - Imp&Metric
1/18

DECLARATION OF INCORPORATION

MANUFACTURER: Harvest Tec Inc.
2821 Harvey St.
P.O. Box 63
Hudson, WI 54016, U.S.A.

REPRESENTATIVE ESTABLISHED IN COMMUNITY: Profitable Farming Company
Middle Barlington, Roborough
Winkleigh, Devon, EX19 8AG
ENGLAND

The person above certifies and declares that:

VIRTUAL MACHINE: Equipment mounted on a farm press and for the application of innoculants onto forage crops.
MODEL: 602BB-INST-17-Imp&Metric
BRAND: Harvest Tec
PATENT NUMBER: US 9,854,743 B2:

This application preservatives for hay Harvest Tec system meets the Directive 2006/42/EC of the European Parliment and the Council of 17 May 2006 and other applicable European Directives including Directive 2004/108/EC on the Electromagnetic compatability.

The application of preservatives for hay Harvest Tec system will be turned on after being installed on a farm press has been declard in conformity with the Machinery Directive.

Person in the community authorized to provide information on the partly completed machinery and making this statement:

Richard Snell, President, Profitable Farming Company
Signed on May 21, 2011: Middle Barlington, Roborough
Winkleigh, Devon, EX19 8AG
ENGLAND

602BB Installation Manual Table of Contents

Introduction

Congratulations and thank you for purchasing a Harvest Tec Model 602BB Microwave Moisture kit. Please read this manual carefully to ensure correct steps are taken to attach the system to the baler. This is designed to read moisture through the baler's monitor or Apple iPad. A parts break of the system is located in the back of the manual.

Right and Left sides are determined by facing in the direction of forward travel.

System Requirements

The Baler Control Module (BCM) must have Version 4.2.0.0 or higher.

***Requirement to run iPad option are 3rd Generation iPad (2012) or newer with iOS8 or greater operating system, plus the Hay App.**

In order for the CNH Baler to receive the ThirtyPlus or CropSaver System messages regarding Status, Moisture and preservative, and display this information on the Baler Work Screen, the software in the Baler Control Module (BCM) needs to be updated to version 4.2.0.0 or higher. Dealers can log an ASIST incident and request the BCM software from CNH Technical Support Services if they need the software prior to those release dates.

Tools Needed

Standard wrench set	Hammer
Electric drill and bits	Center punch
Side cutter	Plasma cutter
Standard nut driver set	Grinding wheel
Standard socket set	

Installation of Dual Channel Processor (DCP)

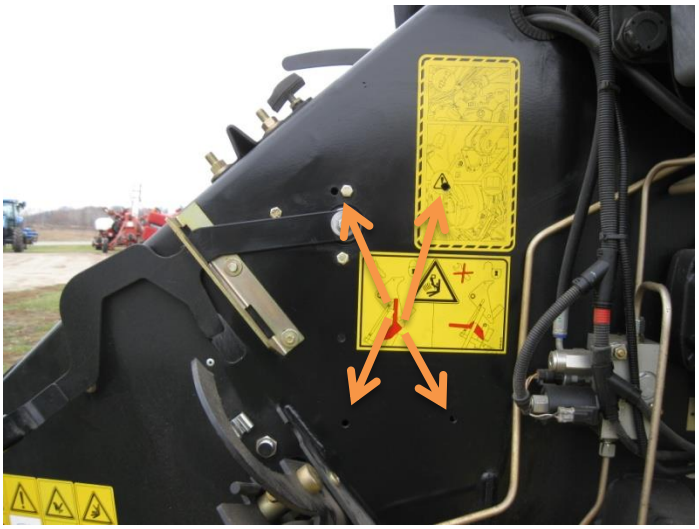

Figure 1

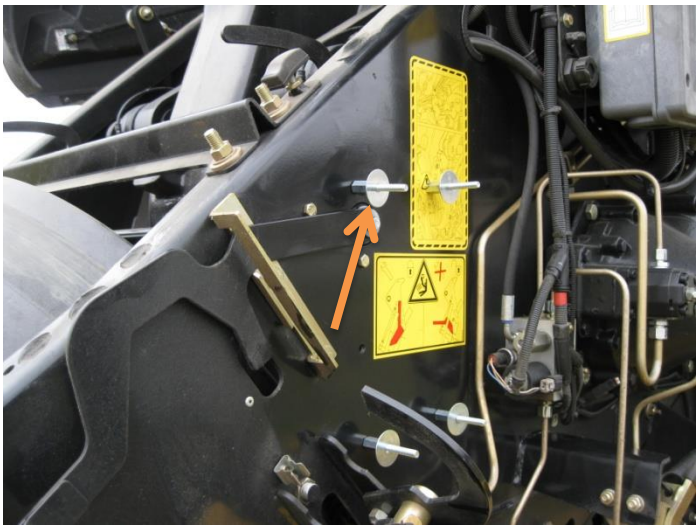

Figure 2

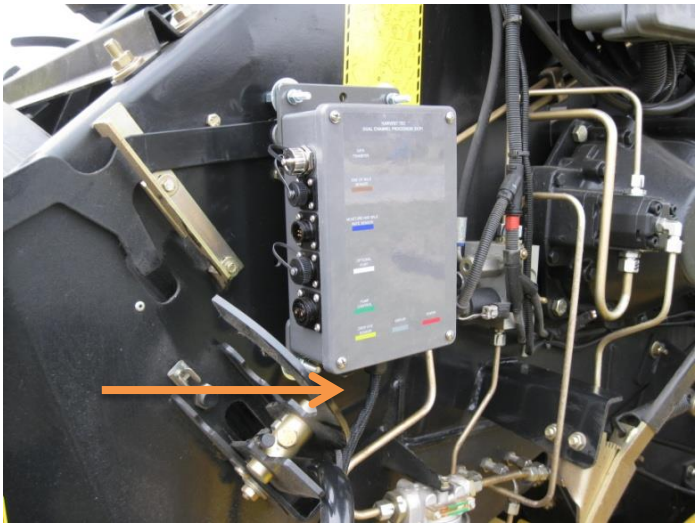

Figure 3

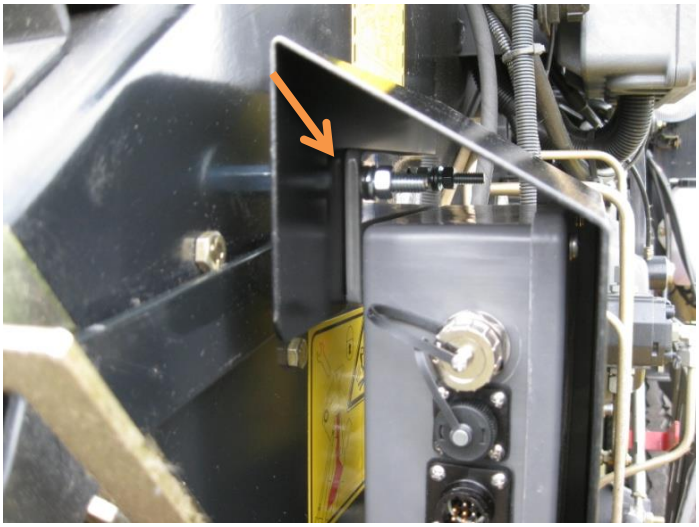

Figure 4

1. Locate the Dual Channel Processor (DCP) 006-6671LS.
2. Lock the baler flywheel brake and lift open the front hood.
3. Locate the four holes by the fly wheel brake (Figure 1).
4. Use four 5/16” x 3” hex bolts with four flat washers (positioning bolt heads on the inside of the baler frame) and secure to the baler with four 1 1/8” threaded standoffs that will be on the outside of the baler frame, Position four fender washers between the DCP and standoffs (Figure 2).
5. Mount the DCP with the display cable pointed down to the baler (Figure 3).
6. Attach lock washers and hex nuts to mount the DCP to the baler. Do not tighten down yet.
7. Before tightening hardware install the DCP shield (001-5650X) over the top two 5/16” bolts between the fender washers and the mounting plate of the DCP. Tighten all hex nuts (Figure 4).

Installation and Routing Wire Harnesses and Baler Interface Harness

Route harnesses along inside of the baler (Left). Keep harnesses away from moving parts and hydraulic hoses. Secure with existing cable clamps or use cable ties. When all connections are made to the DCP secure wires as shown above to allow for water to be shed away from the DCP.

Locate and remove the Active Terminator (below left) of baler. Attach Baler Interface Harness (006-6650VA) to that location. Reconnect Active Terminator (below) to open port of that same harness (006-6650VA)

Installation of Bluetooth Receiver

Locate a safe location in the cab of the tractor to place the Bluetooth Receiver (030-6672B). Recommended location is as close to the iPad being used as possible.

Connect the Power / Communication harness (006-6650TM(E)) to the bottom of the receiver (right).

*New for production year 2018. All Bluetooth receivers (030-6672B) are now equipped with lights to indicated both power and iPad connection.

Red Light – The Bluetooth receiver has power
Green Light – When the proper active connection is selected in the Hay App menu, the green light will indicate connection with the iPad.

Installation of Star Wheel Moisture Sensors

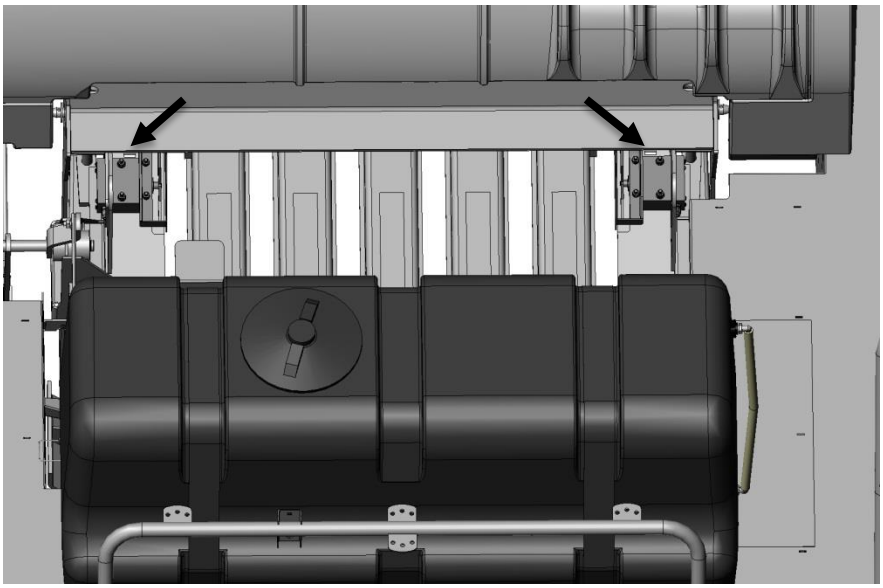

Figure 5

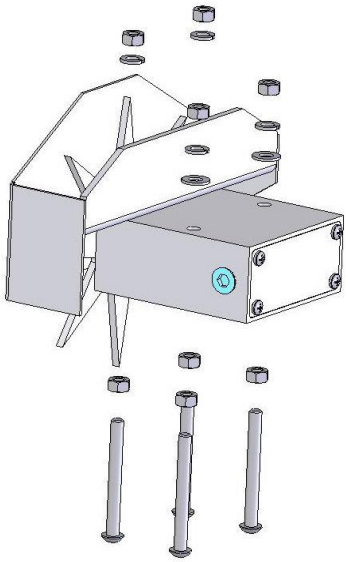

Figure 6

1. Locate the two star wheel moisture sensors (030-4641) and twine diverters (001-4644 & 001-4645).
2. Directly behind the knotters, locate the four predrilled holes per side shown at the arrows. This location is also beneath the lift points on top of the baler (Figure 5).
3. Install the eight (four per side) 5/16” X 3” Allen head cap screws. Make sure the Allen heads are in the bale chamber. Secure using 5/16” hex nuts (Figure 6).
4. Install the star wheels below the lift points on the baler.
5. Install the twine diverters over the star wheel sensor. The twine diverter with two extra holes will be installed on the right star wheel when looking from the rear of the baler toward the tractor.
6. Secure the star wheels and twine diverters with four M8 hex nuts, lock washers, and two flat washers (Figure 6).

Connecting Star Wheels to the DCP

Locate the moisture harness (006-7303HL). Remove the four pan head screws on each star wheel and loosen the grommet. Insert the eye loop of the wire into the star wheel block and install on the end of the swivel. Leave a loop in the wire to allow the star wheel cover space to be reinstalled.

Tighten the swivel nut, followed by the grommet, and finally install and tighten the four screws. The picture to the left shows the star wheel block open with the wire looped and attached to the swivel. Once both wheels are complete route the harness towards the DCP. Secure loose wires with cable ties.

Installation of Star Wheel and Bale Rate Harness

First, remove the cover from the star wheel block and use a 1/4” nut driver to remove the nut from the electronic swivel. Next, run the star wheel sensor wire through the black grommet and place the eye terminal on the star wheel sensor. Tighten the eye loop with the nut on the sensor and put the star wheel cover back on the base. Next, tighten the grommet to form a tight seal around the wire. The bale rate sensors will be factory installed on the right side twine guard in the correct position. The sensor with the longer sensor wire should say “FRONT” which indicates it should be placed in the front sensor hole. The sensor wire with the shorter wire should say “BACK”.

The tip of the sensor should be placed no more than 1/4” (7mm) away from the star wheel teeth and no less than 1/8” (3mm) from the star wheel teeth. Each sensor will have an LED light located on the sensor by the diverter. Once the unit is powered up spin the wheel and make sure that both led lights turn on and off. If they don’t turn on and off, adjustments may need to be made.

Once the star wheel connection is complete, run the harness along the left side baler frame to the Dual Channel Processor (DCP). The Dual Channel Processor is located next to the flywheel brake.

Installation of End of Bale Sensor

The end of bale sensor determines the position of the needles on the baler. When the needles cycle the sensor communicates this information to the Dual Channel Processor. This information is used for job records and will be used by the optional Bale Identification system.

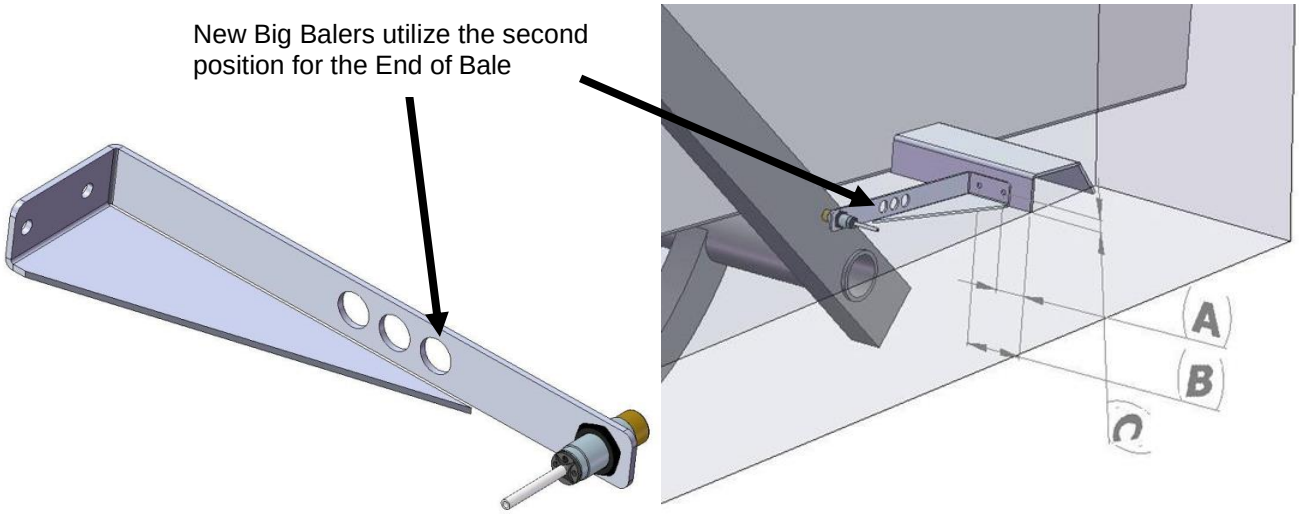

A	B	C
2-7/9”	4-3/8”	5/8”
(75mm)	(10.5cm)	(16mm)

Mount the end of bale sensor bracket (001-4648) as shown (above) on the ladder side of the baler (and same side as the main controller). Mark and drill two 3/8” (10mm) holes and attach the bracket using two 5/16” x 1” self-tapping screws, and 5/16” flange nuts. Keep the sensor 1/4" (7mm) from the needle and tighten both nuts.

New BB Balers have been installing the End of Bale Sensor in the second position and trimming off the excess steel. Run the sensor cable (006-7400) and extension (006-7400BBEXT) up to the Dual Channel Processor (DCP) down the ladder side of the baler and secure it properly out of the way of any moving parts and hydraulics.

Microwave Sensor Installation

Locate the mounting holes on the back of both the left and right side of the bale chute (figure 1).

Mount the rear microwave moisture mounting brackets 001-2601 (figure 2) on the holes using two 3/8” x 3 1/2" hex bolts, nuts and lock washers located in parts bag D.

Figure 2

Figure 1

Attach the microwave moisture sensors to each mounting bracket. Sensor 006-4641MRX will be mounted on the left side of the bale chute (figure 4). Sensor 006-4641MTX will be mounted on the right side (figure 5). Mount the sensors with the wire connection port toward the baler.

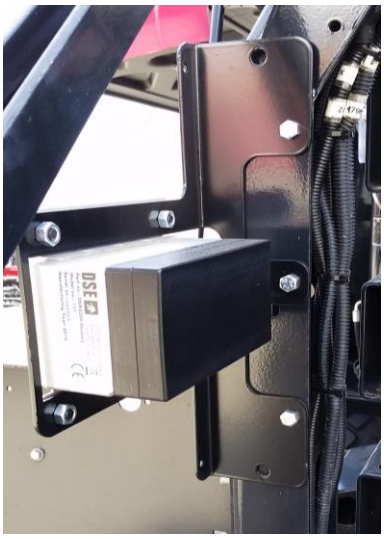

Figure 3

Figure 4

Locate the MWM wiring harness (006-6650MW) in the kit. Start by locating the connector with the white heat shrink label marked RX. Connect this connector to the sensor mounted on the right side chute (006-4641MRX).

If connecting to a *moisture only system* route the MWM harness (006-6650MW) to the DCP on the baler and remove the green capped terminating resistor (006-5650Z) on the pump modular port, connecting the MWM sensors. Secure the harness.

If connecting to a *complete applicator system* route the MWM harness (006-6650MW) to the Pump Controller (006-5672) on the pump plate next to the tank and remove the green capped terminating resistor (006-5650Z) on the pump modular port. Connect the MWM harness to the pump controller in the modular port. Secure the harness. The green resistor is no longer needed.

Microwave Sensor Installation (continued)

Locate the 006-7400 harness (stuffer sensor) and the L-shaped bracket (001-4648SS) from the parts bag. Bend the L-shaped bracket so it is approximately at 120 degrees. Attach the stuffer sensor to the bracket loosely and locate the shielding on the right hand side of the baler ahead of the stuffer (figure 8).

Figure 8

Position the stuffer sensor and bent L-bracket against the outside of the shield so the sensor is positioned within 3/8” (10mm) of the stuffer (see below). Mark mounting hole location and attach bracket to the shielding using at least one of the 5/16-1” hex bolts and a flange nut. Secure the sensor to the bracket by tightening the jam nuts (figure 9).

Figure 9

Route the wire from the sensor along the existing wiring to the top of the chamber and use the included extension harness (006-6650FMX) to the MWM harness at the rear of the baler. Secure with cable ties.

Figure 10

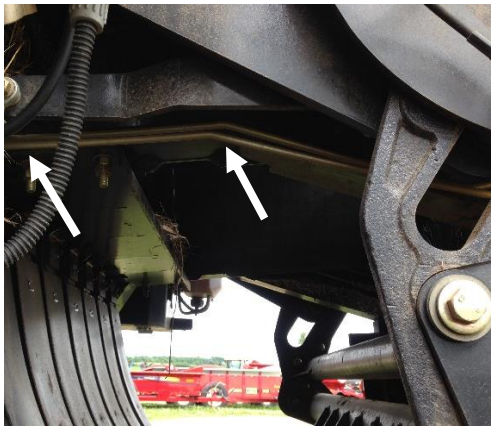

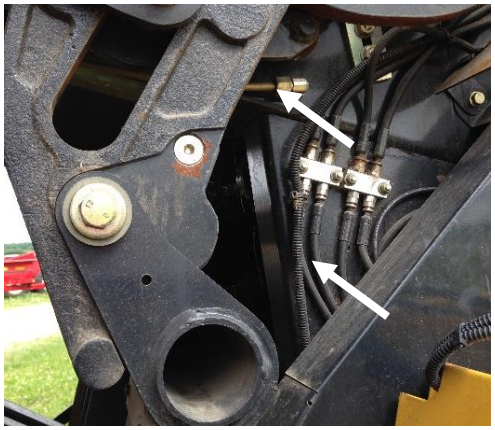

Figure 11

The wire from the stuffer sensor will be connected to the 4 pin connector coming off the main harness about 2’ (.6M) from the back of the baler on the left hand side. Secure with cable ties.

Route the MWM harness (006-6650MW) to the DCP on the baler and remove the green capped terminating resistor (006-5650Z) on the pump modular port, connecting the MWM sensors. Secure the harness.

If connecting to a complete applicator system route the MWM harness (006-6650MW) to the Pump Controller (006-5672) on the pump plate next to the tank and remove the green capped terminating resistor (006-5650Z) on the pump modular port. Connect the MWM harness to the pump controller in the modular port. Secure the harness. The green resistor is no longer needed.

Wiring Diagram – Connecting to 600BB Moisture Only System

1. Locate the tractor power/communication harness (006-6650TM(E)).
2. At the back of the tractor run the power leads to the battery.
3. Connect the red power wire with the 50 amp fuse to the positive side (12 volt) of the battery.
   a. **The power harness must be connected to the battery!** The unit will draw more amps than convenience outlets can handle. Any modifications of the power harness will void systems warranty.
   b. **This unit will not function on positive ground tractors.**
4. Connect the black ground wire to frame of tractor or negative side of (12 volt) battery.
5. Connect the Bluetooth Receiver (030-6672A) to the Communication Harness (006-6650TM(E)). Place in a safe location in the cab. Behind the seat for example.
6. Connect the orange Keyed Power wire (006-5650K) to a keyed power source.
7. Connect the end to the Communication Harness (006-6650TM(E)) to the Bluetooth Receiver.
8. Connect the orange keyed power wire (006-5650K) to a keyed power source on the tractor.
9. Connect the Chute Wire Harness (006-6650MWL) into the Pump Controller port on the DCP.
10. Connect Microwave Sensors (006-4641MTX & 006-4641MRX) to the Chute Wire Harness.
11. Connect the Stuffer Sensor (006-7400) to the Chute Wire Harness.
12. When running a steamer, connect the Power / Comm extension harness (006-6650FMX) to the baler mounted Power / Comm Harness (006-6650LS(E)) for an additional 25' length from the tractor to the baler.

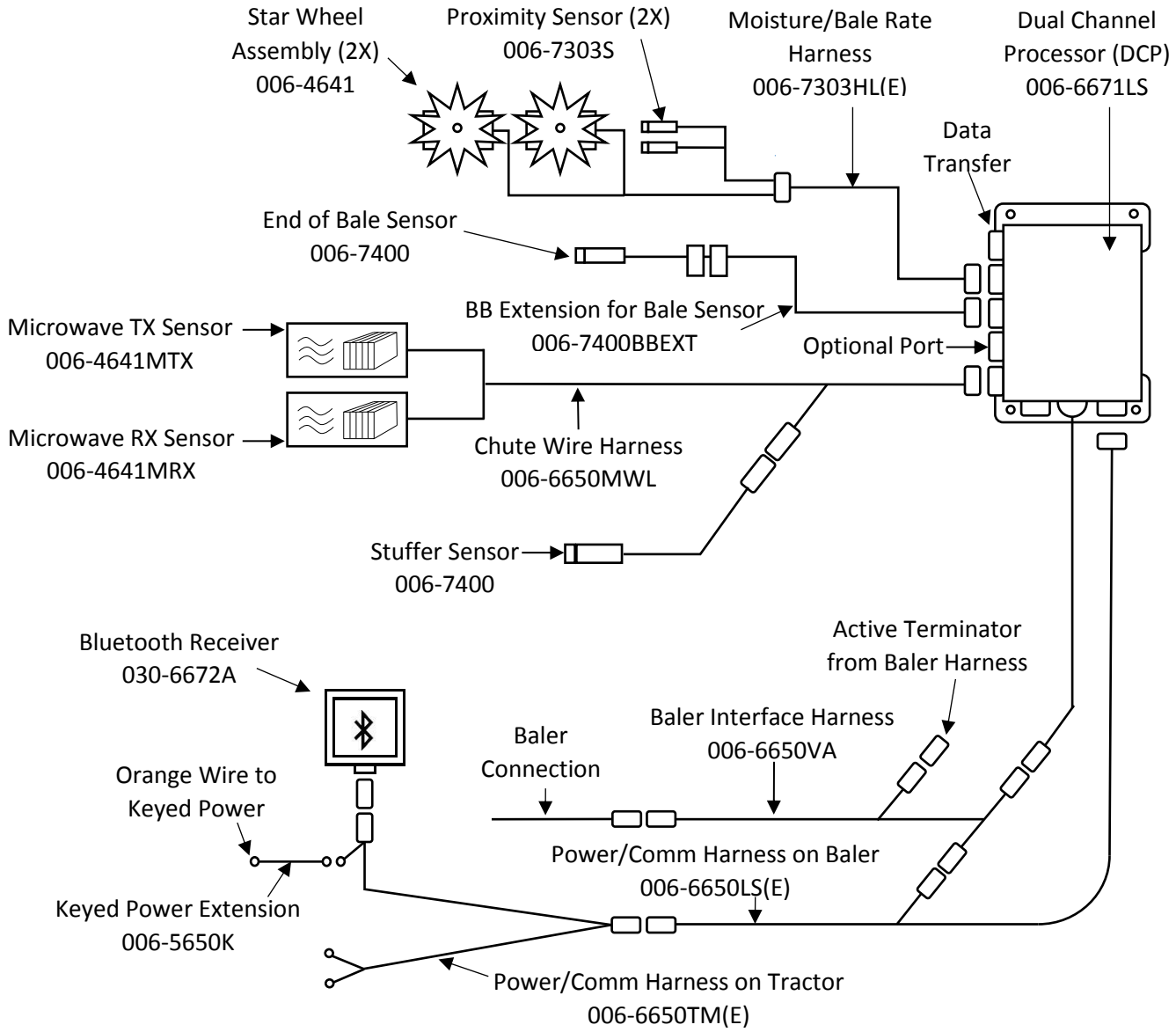

*Note: (E) indication is used for International Dealers

Pin Outs

Power/Comm Harness 006-6650TM(E) at Hitch

Pin 1	Red	+12V Power to TSD
Pin 2	Red	+12V Power to DCP
Pin 3	Orange	Keyed Power
Pin 4	Gray	Shield
Pin 5	Green	HT Can Low
Pin 6	Yellow	HT Can Hi
Pin 7	Orange	Can1 Hi
Pin 8	Black	Ground from TSD
Pin 9	Black	Ground from DCP
Pin 10	Blue	Can1 Low

Power/Comm Harness 006-6650LS(E) at Hitch

Pin 1	Red	+12V Power to TSD
Pin 2	Red	+12V Power to DCP
Pin 3	Orange	Keyed Power
Pin 4	Gray	Shield
Pin 5	Green	HT Can Low
Pin 6	Yellow	HT Can Hi
Pin 7	Orange	Can1 Hi
Pin 8	Black	Ground from TSD
Pin 9	Black	Ground from DCP
Pin 10	Blue	Can1 Low

Chute Wire Harness
006-6650MWL

Bluetooth Receiver on Harness 006-6650TM(E)

Pin 1	Red	+12V Power from DCP
Pin 2	Black	Ground from TSD
Pin 3	Yellow	HT Can Low
Pin 4	Gray	Shield
Pin 5	Green	HT Can Hi
Pin 6	Orange	Can1 Hi
Pin 7	Blue	Can1 Low

006-6650VA to DCP Whip

Pin 1	Red	Can Power
Pin 2	Black	Can Ground
Pin 3	Yellow	HT Can Hi
Pin 4	Gray	Shield
Pin 5	Green	HT Can Low
Pin 6	Orange	Can1 Hi
Pin 7	Blue	Can1 Low

Pin Outs (continued)

<u>006-6650VA to 006-6650LS€</u>

Pin 1	Red	Can Power
Pin 2	Black	Can Ground
Pin 3	Yellow	HT Can Hi
Pin 4	Gray	Shield
Pin 5	Green	HT Can Low
Pin 6	N/A	
Pin 7	N/A	

<u>006-6650VA Harness to Baler Plug</u>

Pin A	N/A	
Pin B	Red	TBC Power
Pin C	N/A	
Pin D	Gray	TBC Ground
Pin E	Orange	Can1 Hi
Pin F	Blue	Can1 Low

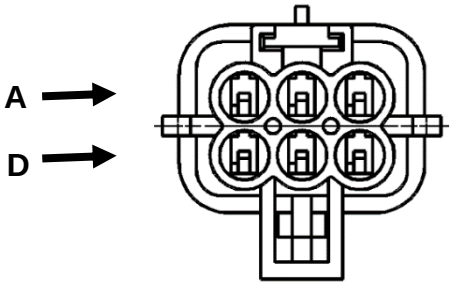

<u>Main Power Connector on DCP</u>

Pin 1	Red	+12V Power from tractor
Pin 2	Black	Ground from tractor
Pin 3	Orange	Keyed power

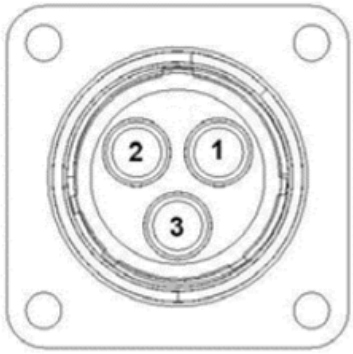

<u>Star Wheel and Bale Rate Sensor Connector on DCP</u>

Pin 1	Blue	+12V Power
Pin 2	Orange	Ground
Pin 3	Black	Signal for sensor 1
Pin 4	White	Signal for sensor 2
Pin 5	N/A	
Pin 6	N/A	
Pin 7	N/A	
Pin 8	Violet	Star wheel input 1
Pin 9	Brown	Star wheel input 2

<u>End of Bale Sensor on DCP</u>

Pin 1	Brown	Sensor Power
Pin 2	Blue	Sensor Ground
Pin 3	N/A	
Pin 4	Black	Signal from Sensor

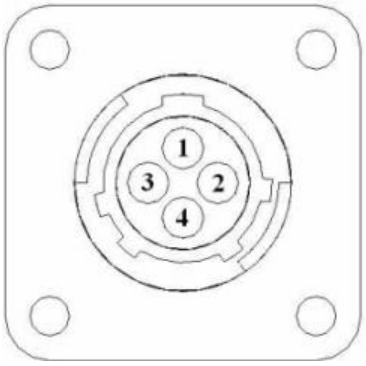

Pin Outs (continued)

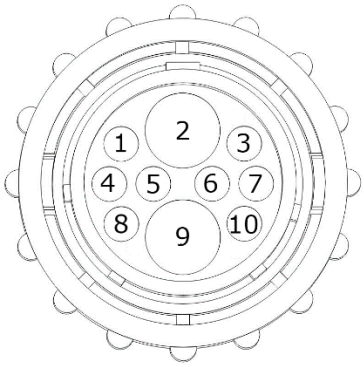

Microwave Pre-Compression Chamber Harness 006-6650MWL

Pin 1	Red	Power
Pin 2	N/A	Not Used
Pin 3	N/A	Not Used
Pin 4	Yellow	Can H In
Pin 5	Green	Can L In
Pin 6	Orange	Can H Out
Pin 7	Blue	Can L Out
Pin 8	Black	Ground
Pin 9	N/A	Not Used
Pin 10	N/A	Not Used

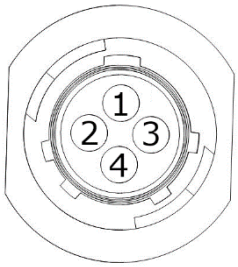

Microwave Pre-Compression Chamber Harness 006-6650MWL

Pin 1	Red	Power
Pin 2	Black	Ground
Pin 3	N/A	Not Used
Pin 4	Brown	Signal

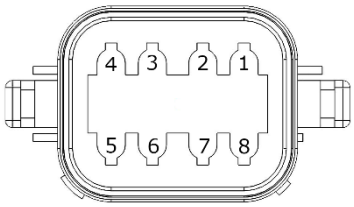

Microwave Pre-Compression Chamber Harness 006-6650MWL (RX)

Pin 1	Black	Ground
Pin 2	Red	Power
Pin 3	Yellow	Can H
Pin 4	Green	Can L
Pin 5	Plugged	
Pin 6	Plugged	
Pin 7	Brown	Signal
Pin 8	Black	Ground

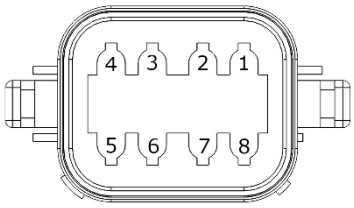

Microwave Pre-Compression Chamber Harness 006-6650MWL (TX)

Pin 1	Black	Ground
Pin 2	Red	Power
Pin 3	Yellow	Can H
Pin 4	Green	Can L
Pin 5	Plugged	
Pin 6	Plugged	
Pin 7	Plugged	
Pin 8	Plugged	

Common Questions

1. **Can microwave sensors function with 500 series PIP?**
   No, microwave sensors are only compatible w/600 Series unit running software version dcp46227 or later.

2. **Can microwave sensors function through a Harvest Tec Touch Screen Display?**
   No, microwave sensors require an ISOBUS Interface (VT) or iPad system to set the microwave settings.

3. **What terminal is required to operate microwave sensor?**
   Microwave sensors are compatible with VT & iPads.

4. **What moisture range will sensors detect?**
   Pre-Compression Chamber microwave sensors have a moisture range of 6-60% moisture. The Bale Chute chamber sensors have a range of 6-40%.

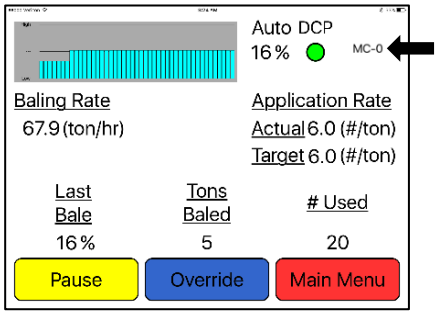

5. **How do I know if I'm displaying microwave or star wheel moisture?**
   The sensor type selected is indicated in the upper right corner of the run screen (right). MC-0 indicates starwheels, MC-1 indicates MWM Pre-Compression Chamber, MC-2 indicates MWM Bale Chamber System, MWM-3 indicates other.

6. **What crops are the microwave sensors designed for?**
   The Microwave sensors are designed and calibrated for Alfalfa.

7. **Is there a calibration to the microwave sensors for different crops?**
   No, there is no adjustments needed.

8. **Do the sensors emit harmful waves?**
   No

9. **How often should a Zero Adjust (ZA) be performed?**
   A zero adjust should be performed on initial installation. It is also recommended during a zero adjust calibration at the beginning of each season.

10. **When reading moisture with microwave sensors why can I <u>not</u> select Automatic mode?**
    MWM Pre-Compression sensors can be used in both Auto and Manual mode.
    MWM Bale Chute sensors can only be used in Manual Mode due to the lag time between the application tops and the sensors.

11. **Where does the green terminating resistor plug in to microwave sensors?**
    The green resistor (006-5650Z) is not used. Store the resistor for potential updates and changes you may make to the system in the future.

12. **Where do I position 840 moisture dye marker spray tip when operating microwave sensors in pre-compression chamber?**
    Dye marking tips should be located behind (toward rear end of chute) MWM Chute sensors, with the tips angled toward the rear at a 45 degree angle. Alternative mounting would locate the dye marking tips above the bale w/ the brackets mounted off the top cross beam.
    When using a Pre-Compression system mount the tips as close to the front of the bale chamber as possible, either on the side if there is clearance or on the top of the bale.

13. **What do the lights on the 030-6672B indicate?**
    Red Light – The Bluetooth receiver has power. *Green Light* – When the proper active connection is selected in the Hay App menu, the green light will indicate connection with the iPad.

Troubleshooting

PROBLEM	POSSIBLE CAUSE	SOLUTION
Moisture reading errors (high or low)	1. Wire disconnected or bad connection between star wheels and DCP	1. Reconnect wire.
	2. Low power supply to DCP	2. Check voltage at box. (Min of 12 volts required.) See Diagnostics section of manual.
	3. Dry hay lower than 8% moisture or wet hay over 75%.	3. Pre-Compression System reads 6-60% moisture. The Bale Chute system read 6-40% moisture.
	4. Ground contact with one or both star wheels and baler mounted processor.	4. Reconnect.
	5. Short in wire between star wheels and DCP.	5. Replace wire.
	6. Check hay with hand tester to verify.	6. Contact Harvest Tec if conditions persist.
Moisture readings erratic.	1. Test bales with hand tester to verify that DCP has more variation than hand tester.	
	2. Check all wiring connections for corrosion or poor contact.	2. Apply dielectric grease to all connections.
	3. Check power supply at tractor. Voltage should be constant between 12 and 14 volts.	3. Install voltage surge protection on tractors alternator.
Display reads under or over power.	1. Verify with multi-meter actual voltage. Voltage range should be between 12-14 volts.	1. Clean connections and make sure applicator is hooked to battery. See Diagnostics section of manual.
Bale rate displays zero.	1. Bale rate sensors are reversed. 2. Short in cable. 3. Damaged sensor. 4. Sensor too far from starwheel.	1. Switch the sensors next to the star wheel. 2. Replace cable. 3. Replace sensor. 4. Adjust gap between prox sensor and star wheel so it is 1/8-1/4” away.
MWM moisture reads low all the time	1.Stuffer sensor out of adjustment	1. Verify stuffer sensor is not damage and is sensing the stuffer moving each time
Bluetooth Receiver lights will not illuminate	1. Bluetooth receiver not connected 2. Harness disconnected 3. Low power	1. Check connections and voltage. Minimum 12.5V needed.
	Red Light – The Bluetooth receiver has power *Green Light* – When the proper active connection is selected in the Hay App menu, the green light will indicate connection with the iPad.	

Parts Breakdown

Star Wheel Moisture Sensor and Bale Rate Sensors

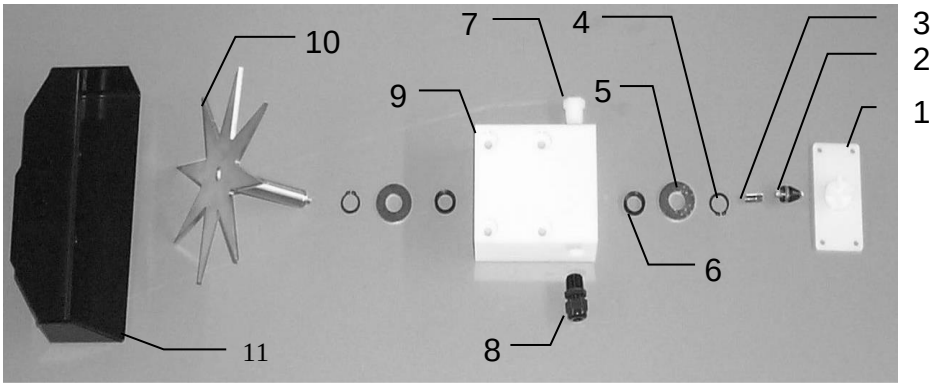

Ref	Description	Part Number	Qty	Ref	Description	Part Number	Qty
1.	Block cover	006-4641B	2	9.	Star wheel block	006-4641A	2
2.	Electronic swivel	006-4642A	2	10.	Star wheel sensor	030-4641C	2
3.	Swivel insert	w/ Ref # 10	2	11.	Twine guard-left	001-4645	1
4.	Snap ring (per side)	006-4641K	2		Twine guard-right (prox)	001-4644	1
5.	Washer (per side)	w/006-4641K	2		And with bale rate sensor		
6.	Dust seal (per side)	w/006-4641K	2		holes in it		
7.	Plug fitting	003-F38	2	1-10	Star wheel assembly	030-4641	2
8.	Wiring grommet	008-0821A	2				

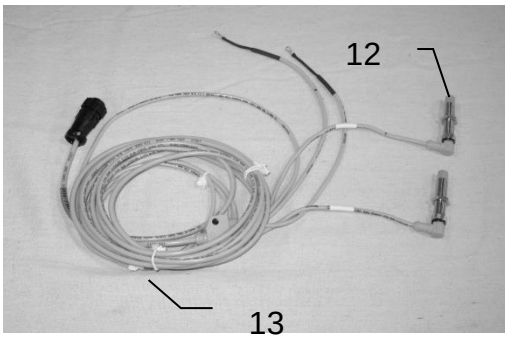

Ref	Description	Part Number	Qty
12	Bale rate sensor	006-7303S	2
13	Moisture and bale rate harness	006-7303HL(E)	1

*Note: (E) indication is used for International Dealers

Microwave Moisture Bale Chute System – 701MWM

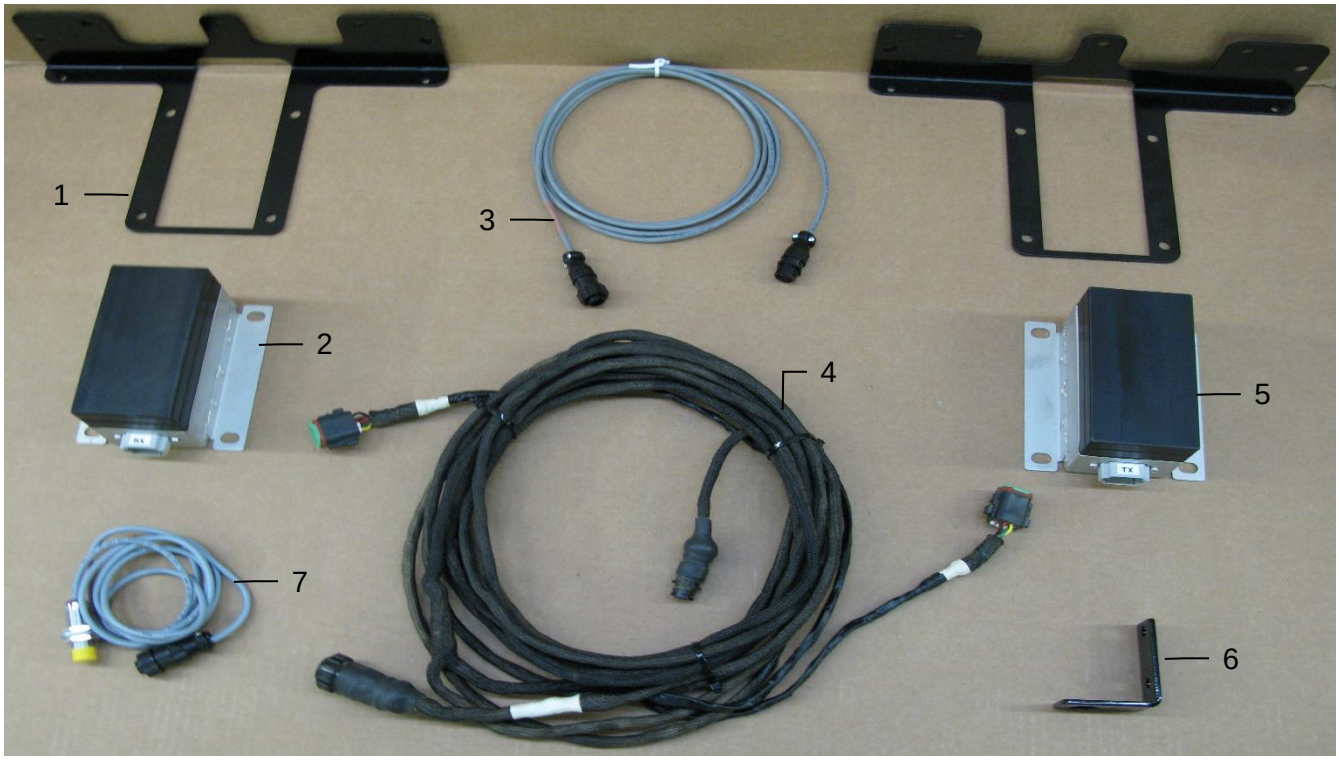

Ref	Description	Part #	Qty
1	MWM Rear Mounting Bracket	001-2601	2
2	Microwave TX Sensor	006-4641MTX	1
3	End of Bale Extension Harness (20')	006-7400MXT	1
4	MWM Pre-Compression Harness	006-6650MWL	1
5	Microwave RX Sensor	006-4641MRX	1
6	End of Bale Bracket (Stuffer Bracket)	001-4648SS	1
7	End of Bale Sensor (Stuffer Sensor)	006-7400	1
NP	Power / Comm Extension Harness (25')	006-6650FMX	1

Complete Assembly 030-0701MWM (Ref 1-7)

Optional iPad Mini Mounting Kit (030-2014MK)

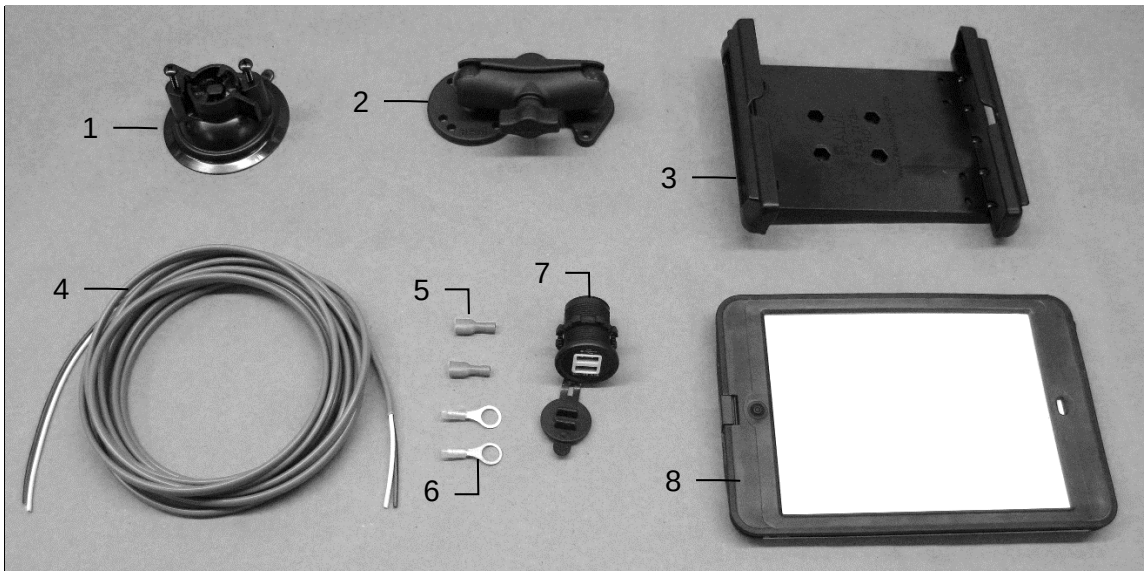

Ref	Description	Part #	Qty
1	Suction cup mount	001-2012SCM	1
2	Ram mount	001-2012H	1
3	iPad Mini spring load cradle (Mini 1,2,3)	001-2012SLC	1
4	16 gauge power wire	006-4723P	1
5	Female spade connector	Hardware	2
6	Eye loop connector	Hardware	2
7	iPad Mini Charger 12V	001-2012P	1
8	iPad Mini 4 case	001-2012C4	1
NP	4 amp fuse	Hardware	1
	Mounting Kit Assembly	030-2014MK (Includes All Parts)	

Installation Instructions

1. Identify 12V power source for wires to connect.
    a. Eye loops included if wiring directly to the battery is desired.
    b. Test for key power source if preferred to have power to the USB shut off with the key.
2. Once power source is identified, cut wires to desired length.
3. Crimp the two supplied quick connectors onto each the white and black wire.
4. Remove the round locking plastic nut from USB plug before connecting the wires. Black (+) White (-).
5. The wires will then be hooked to the designated terminals on the bottom of the USB plug
6. Drill a 1 1/8” hole in the preferred mounting location. Be sure to clean any sharp edges after drilling.
7. Feed the wires through the mounting hole.
8. If using the round plastic nut to secure plug in place, slide the nut back over the wiring before connecting the wires to powered source.
9. Connect the wires to the identified power source if easier to do so before tightening the plug into place.
10. Tighten plug using either the round plastic nut or mounting plate and two screws, both options supplied.
11. Once connected, hook a USB charging cord into the plug and connect a mobile device/tablet to ensure the plug is operating as you wish (key power working properly if necessary).

NOTE: This plug is not designed to charge two iPads. System damage could occur if this is attempted. System will charge a mobile phone and iPad simultaneously without problem.

Optional iPad Display Kit (030-4670DK)

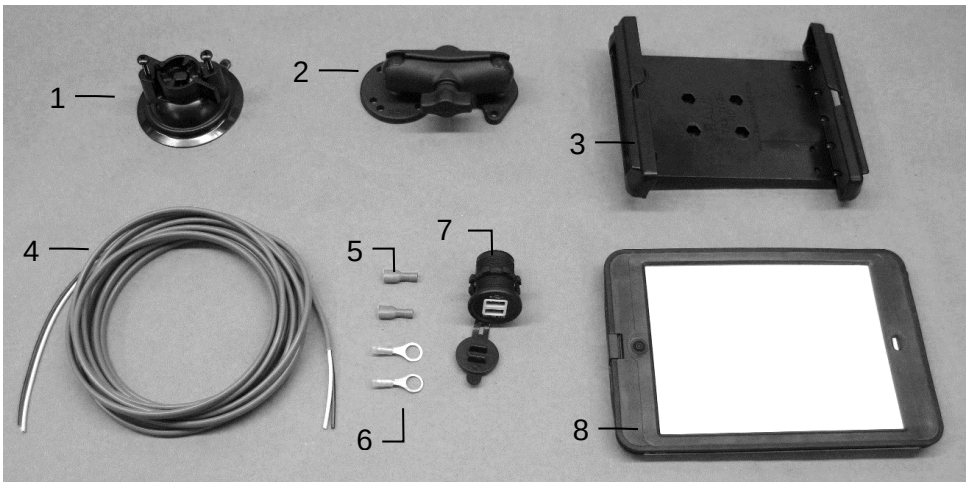

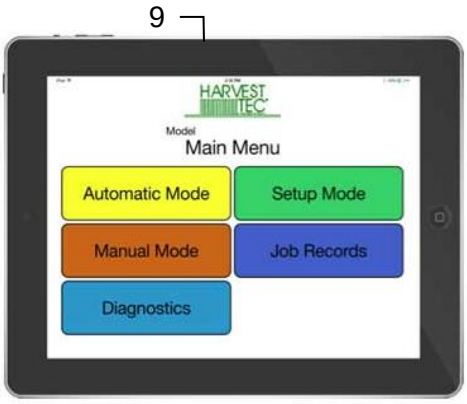

Ref	Description	Part #	Qty	Ref	Description	Part #	Qty
1	Suction cup mount	001-2012SCM	1	7	iPad Mini Charger 12V	001-2012P	1
2	Ram mount	001-2012H	1	8	iPad Mini 4 case	001-2012C4	1
3	iPad Mini spring load cradle (Mini 4)	001-2012SLC	1	9	iPad Mini 4	006-4670IP	1
4	16 gauge power wire	006-4723P	1	NP	4 amp fuse	Hardware	1
5	Female spade connector	Hardware	2				
6	Eye loop connector	Hardware	2	Mounting Kit Assembly		030-4670DK (Includes All Parts)	

Installation Instructions

1. Identify 12V power source for wires to connect.
    a. Eye loops included if wiring directly to the battery is desired.
    b. Test for key power source if preferred to have power to the USB shut off with the key.
2. Once power source is identified, cut wires to desired length.
3. Crimp the two supplied quick connectors onto the white and black wire.
4. Remove the round locking plastic nut from USB plug before connecting the wires. Black (+) White (-).
5. The wires will then be hooked to the designated terminals on the bottom of the USB plug
6. Drill a 1 1/8” hole in the preferred mounting location. Be sure to clean any sharp edges after drilling.
7. Feed the wires through the mounting hole.
8. If using the round plastic nut to secure plug in place, slide the nut back over the wiring before connecting the wires to powered source.
9. Connect the wires to the identified power source if easier to do so before tightening the plug into place.
10. Tighten plug using either the round plastic nut or mounting plate and two screws, both options supplied.
11. Once connected, hook a USB charging cord into the plug and connect a mobile device/tablet to ensure the plug is operating as you wish (key power working properly if necessary).

NOTE: This plug is not designed to charge two iPads. System damage could occur if this is attempted. System will charge a mobile phone and iPad simultaneously without problem.

Notes

Notes

Harvest Tec Inc. Warranty and Liability Agreement

Harvest Tec, Inc. will repair or replace components that are found to be defective within 12 months from the date of manufacture. Under no circumstances does this warranty cover any components which in the opinion of Harvest Tec, Inc. have been subjected to negligent use, misuse, alteration, accident, or if repairs have been made with parts other than those manufactured and obtainable from Harvest Tec, Inc.

Our obligation under this warranty is limited to repairing or replacing free of charge to the original purchaser any part that in our judgment shows evidence of defective or improper workmanship, provided the part is returned to Harvest Tec, Inc. within 30 days of the failure. If it is determined that a non-Harvest Tec branded hay preservative has been used inside the Harvest Tec applicator system where the failure occurred, then Harvest Tec reserves the right to deny the warranty request at their discretion. Parts must be returned through the selling dealer and distributor, transportation charges prepaid.

This warranty shall not be interpreted to render Harvest Tec, Inc. liable for injury or damages of any kind, direct, consequential, or contingent, to persons or property. Furthermore, this warranty does not extend to loss of crop, losses caused by delays or any expense prospective profits or for any other reason. Harvest Tec, Inc. shall not be liable for any recovery greater in amount than the cost or repair of defects in workmanship.

There are no warranties, either expressed or implied, of merchantability or fitness for particular purpose intended or fitness for any other reason.

This warranty cannot guarantee that existing conditions beyond the control of Harvest Tec, Inc. will not affect our ability to obtain materials or manufacture necessary replacement parts.

Harvest Tec, Inc. reserves the right to make design changes, improve design, or change specifications, at any time without any contingent obligation to purchasers of machines and parts previously sold.

Revised 4/17

HARVEST TEC, INC.
P.O. BOX 63
2821 HARVEY STREET
HUDSON, WI 54016
PHONE: 715-386-9100
1-800-635-7468
FAX: 715-381-1792
Email: info@harvesttec.com