Cart Frame

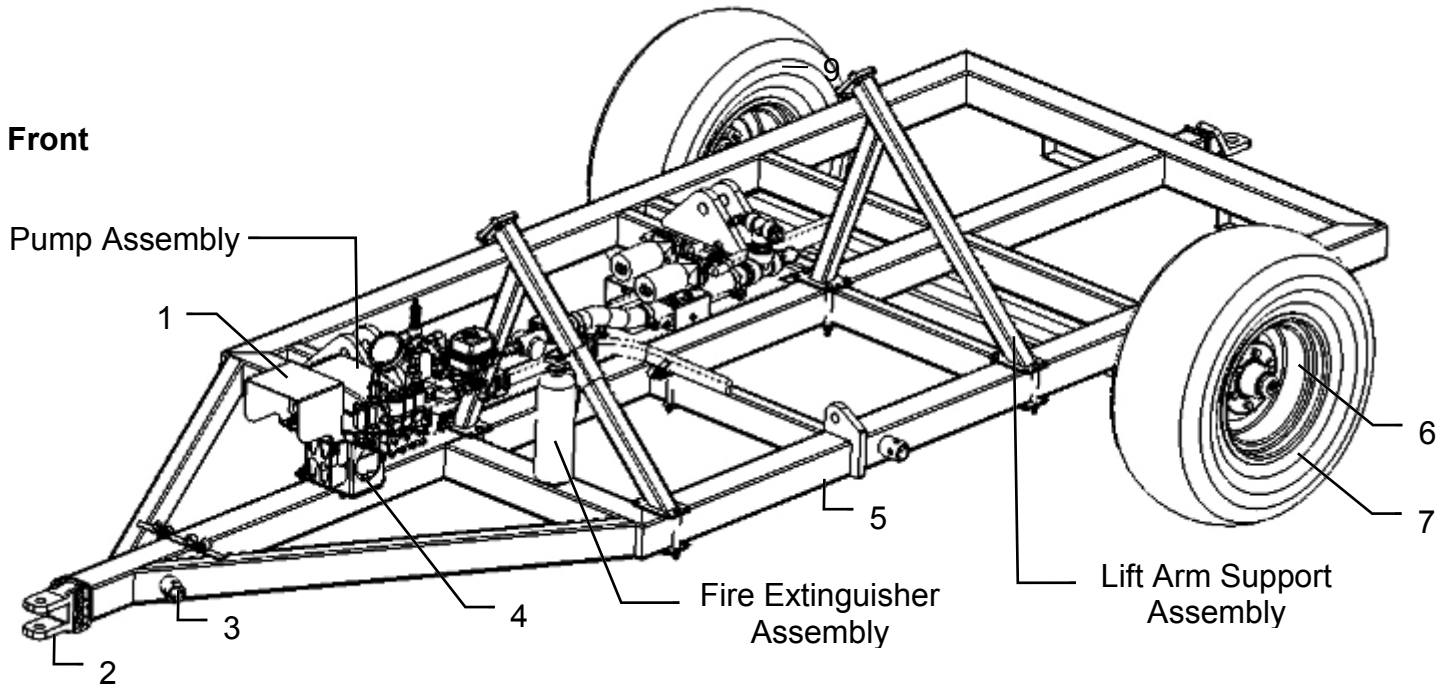

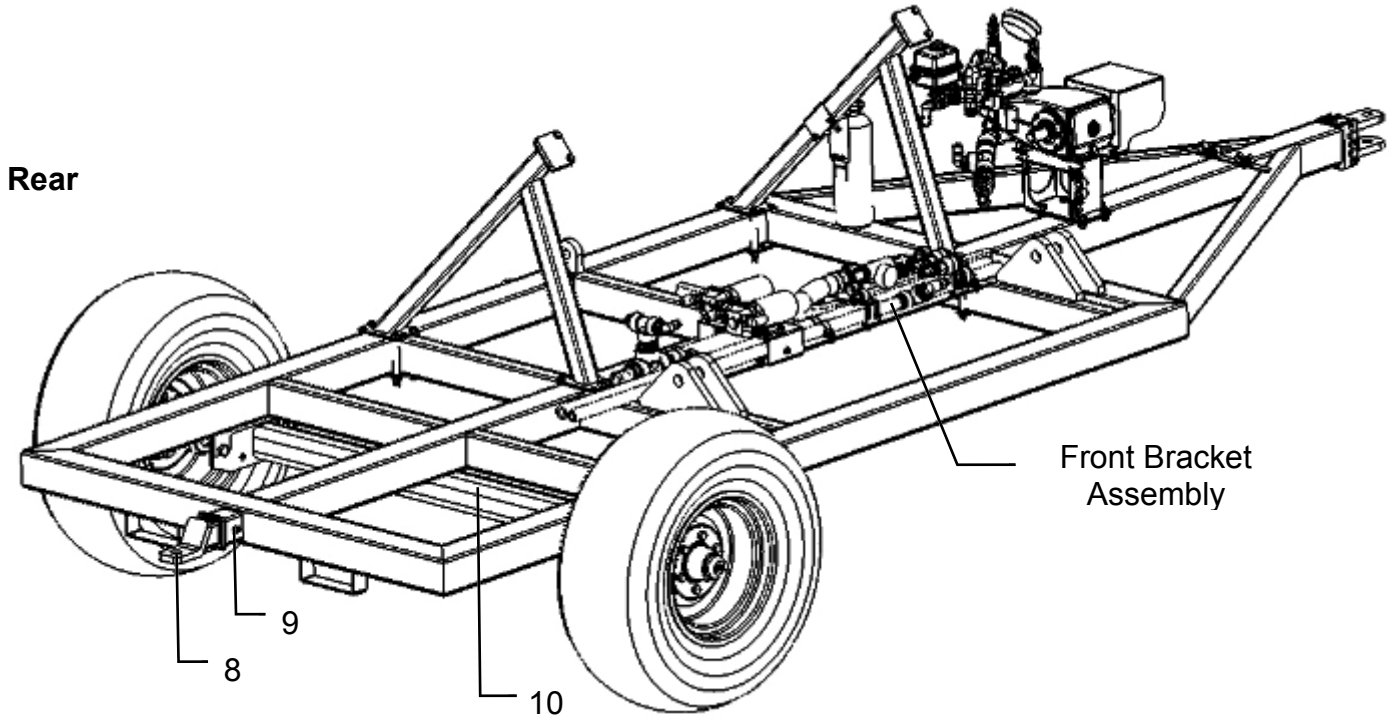

Ref	Description	Part #	Qty	Ref	Description	Part #	Qty
1	PTO Shield	001-7248	1	6	Cart Rim	008-7231	2
2	Clevis Hitch	001-7219A	1	7	Tire	008-7240	2
3	Jack Topwind	008-7133	1	8	2-12”x8 Receiver Hitch	001-7219B	1
4	Pump Bracket	001-7220A	1	9	Receiver Pin	001-7219C	1
5	Cart Frame Assembly	001-7220	1	10	Torsion Axel	008-7240-TX	1