Installation Manual

Model 665BB

115 Gallon Preservative Applicator Upgrade For New Holland BigBaler and Case IH LB 4

HARVEST TEC
Equipment and Products for Quality Hay.™

P.O. Box 63 • 2821 Harvey Street • Hudson, WI 54016
800-635-7468 • www.harvesttec.com

697BB-16-INST
12/19

(intentionally blank)

Harvest Tec Model 665BB Installation Table of Contents

	Page
Introduction	**4**
Installation Kit Reference Chart	**4**
Tools Needed	**4**
Installation of Applicator	**5-17**
Removal of Tank Straps and Tank	5
Installation of Saddle Legs and Saddle	6
Optional Rear Handrail	7
Installation of Pump Manifold and Handrail	7
Installation of Dual Channel Processor (DCP)	8
Installation of Star Wheel Moisture Sensors and Bale Rate Sensors	9
Installation of End of Bale Sensor	10
Installation of the Drain Fill Line	11
Installation of the Spray Shield	12
Big Baler Standard and Packer Models	12
Big Baler Roto-Cut Models	13
Wind Guard Installation	14
Plumbing	15
High and Low Output Tip Descriptions	15
Installation of Star Wheel and Bale Rate Harness	15
Installation of Routing the Main Wire Harness and Baler Interface Harness	16
Installation of iPad Integration Control	17
iPad Integration Control Light Signals	17
Bluetooth Receiver Lights	17
Wiring Diagram	**18**
Pin Outs	**19-21**
Parts Breakdown	**22-32**
Tank, Saddle, & Saddle Legs	22
Pump Manifold	23
Star Wheel Moisture Sensors and Bale Rate Sensors	24
Hose and Drain Fill Line	25
Controls and Harnesses-Dual Channel Processor (DCP)	26
4532B, 4533B and 4534B Installation Kits	27
4535B and 4536B Installation Kits	28
4635B Installation Kit	29
4636B Installation Kit	30
Optional iPad Mini Mounting Kit	31
Optional iPad Display Kit	32
Notes	**33-34**
Warranty Statement	**35**

Introduction

Thank you for purchasing the 665BB Hay Preservative Applicator System. This applicator system has been designed to plug directly into the baler's ISOBUS and display on the New Holland Intelliview 3 or Intelliview 4, Case Pro 300 or Pro 700. As well as the option of operation through an Apple iPad (not included) using the Hay App. The 665BB Preservative Applicator System offers these advantages:

1. Operation coordinated with baler operation
2. Less cab clutter providing better visibility
3. Ease of use with all information on one screen
4. Records kept together
5. The system is ready for future updates

The 665BB Hay Preservative Applicator System is designed to apply buffered propionic acid to the forage crop as it is baled. The 665BB Applicator will adjust the rate of application based on moisture and tonnage of the crop being harvested. This manual will take you through the steps of installing the applicator. Please read this manual carefully to learn how to install the equipment correctly. Failure to do this can result in personal injury or equipment malfunction. If you are unsure about installing the system after consulting this manual, contact your local authorized dealership for additional assistance or look for the contact information on the back cover of this manual. If you are in need of parts for the system please view the Parts Breakdowns toward the back of this manual and contact your local authorized dealer to order the parts. This applicator is designed to apply Crop Saver and Thirty Plus buffered propionic acid.

Right and Left sides are determined by facing in the direction of forward travel.

***Made for iPad® (3rd through Pro 2nd generation), running the current iOS operating system or one version previous required for iPad option**

*iPad is a trademark of Apple Inc., registered in the U.S. and other countries.

****600 Series Applicators with serial number before DCP27000 will require the DCP to be sent to Harvest Tec for a required update in order to use the iPad Integration Module (030-6672C).**

*Hay App version must be **at least 2.5.18 (or higher)** to operate with the iPad Integration Module

Installation Kit Reference Chart

BALER MAKE	MODEL	INSTALL KIT
Case IH	LB 234 Standard or Packer	030-4532B
	LB 334 Standard or Packer	030-4533B
	LB 334 Roto Cut	030-4535B
	LB 434 Standard or Packer	030-4534B
	LB 434 Roto Cut	030-4536B
New Holland	BB 230 Standard or Packer	030-4532B
	BB 330 Standard or Packer	030-4533B
	BB 330 Roto Cut	030-4535B
	BB 340 Standard or Packer	030-4534B
	BB 340 Roto Cut	030-4536B

Tools Needed

- Standard wrench set
- Crescent wrench
- Standard socket set
- Hose cutter
- Electric drill and bits
- Standard screwdriver
- Hammer
- Center punch
- Side cutter
- Standard nut driver set
- Metal cutting tools

Installation of Applicator

Removal of Tank Straps and Tank

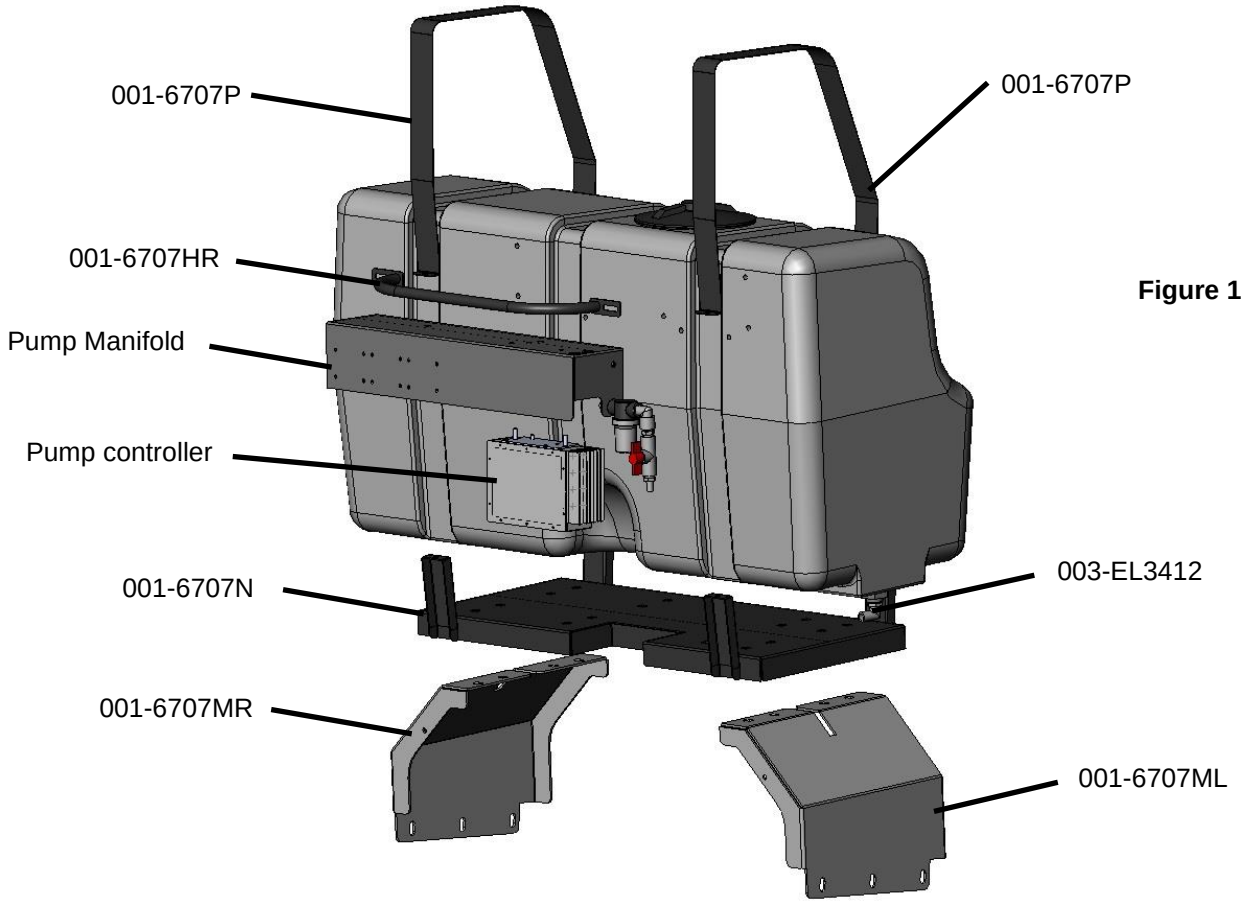

Figure 1

1. Remove the two tank straps (001-6707P) by removing all eight 3/8” hex nuts. Figure 1
2. Lift the tank (005-9218) away from the saddle (001-6707N) and place the tank on a smooth flat surface.
3. Install the pump supply elbow (003-EL3412) on the bottom of the tank. Figure 1
4. Install the drain/fill elbow (003-EL3434) on the side of the tank below the sight gauge.

Installation of Saddle Legs and Saddle

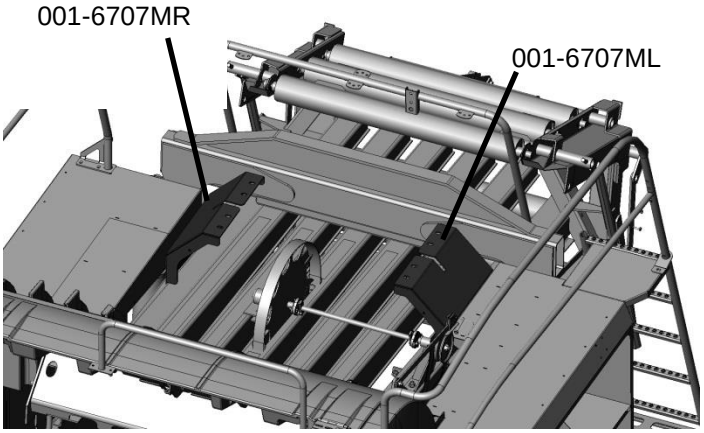

Figure 2

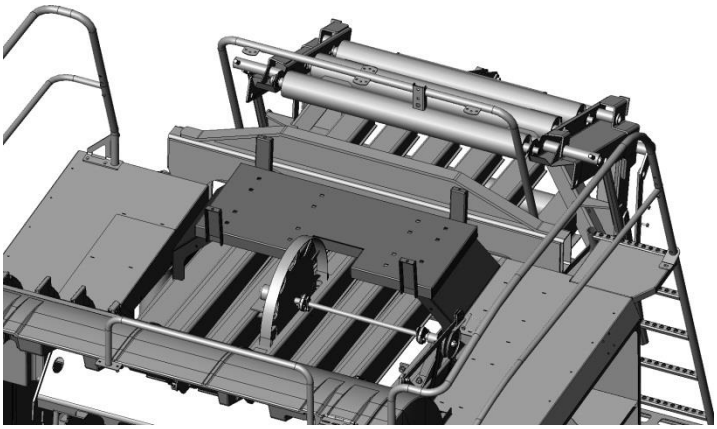

Figure 3

1. Install the two saddle legs (001-6707MR & 001-6707ML) on to the top of the baler chute as shown. Fig 2
2. Secure the two legs with six (three per side) 1/2” x 1-3/4” carriage bolts, flats washers, locks washers, and hex nuts. The six holes will be already punched out of the baler frame and will line up with the saddle legs. Make sure the bolt head is in the chamber.
3. Install the tank saddle (001-6707N) on top of the saddle legs. Figure 3
4. Secure the tank saddle to the saddle legs using eight (four per side) 1/2" x 1-3/4” carriage bolts, flat washers, lock washers, and hex nuts. Use the outside set of holes for four foot wide balers and the inside set of holes for three foot wide balers. Figure 3
5. Make sure the carriage bolt heads are on top of the saddle and the bolt points towards the bale chamber.
6. Install the tank and secure with the straps and hardware removed from before. The tank straps will need to be secured with a double nut.

New Holland 330+ & CaseIH LB334XL Balers

The tank leg mounting location will need to be moved toward the back of the bale chute with baler models NH330+ and Case LB334XL. Move the location back of the baler 6” (151.5mm) and drill extra hole (below)

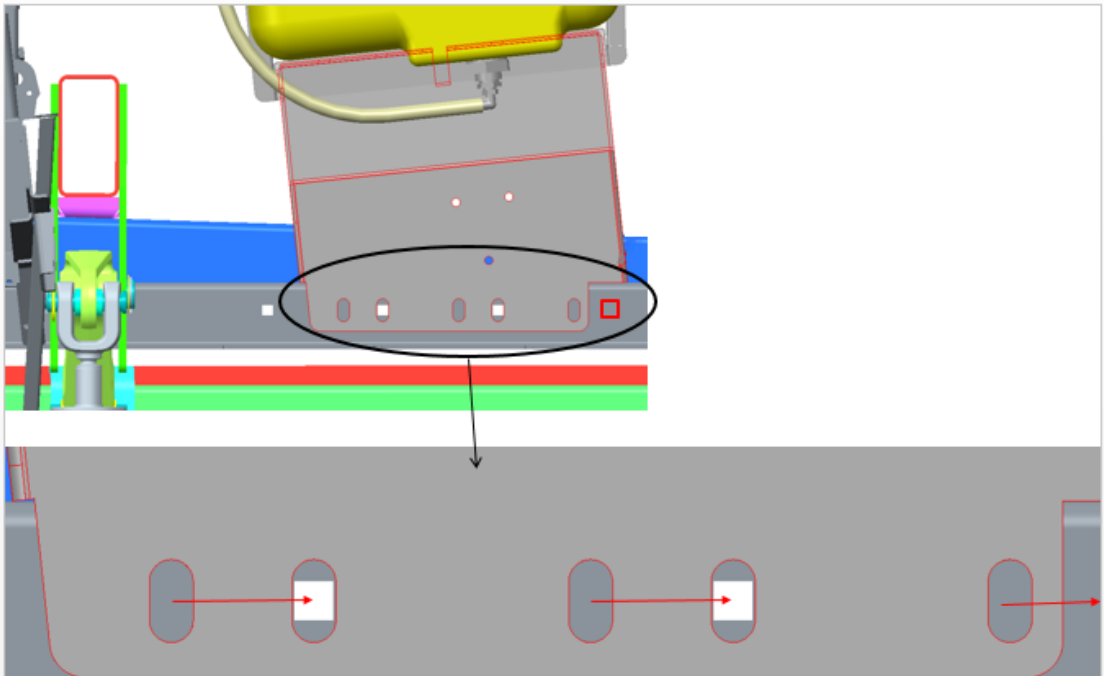

2" (51.5mm) 6” (151.5mm)

*Distance is center to center.
Drill hole size to 1/2" (16mm)

Optional Rear Handrail (not included)

There is now an optional rear hand rail bracket available for the NH330+ & NH340+ and LB334XL & 434XLbaler models either in front or behind the factory folding handrail. To reposition the lights, camera and beacon light to the back of the preservative tank (shown right).

If tank is mounted behind the folding handrail then the optional 001-6707HR3 (3' wide balers) or 001-6707HR4 (4' wide balers) handrails are available from Harvest Tec for relocation of lights.

Note:
Relocation of factor beacon, camera, and light harness from within factory folding handrail tubing to applicator handrail tubing is required.

Installation of Pump Manifold and Hand Rail

Figure 4

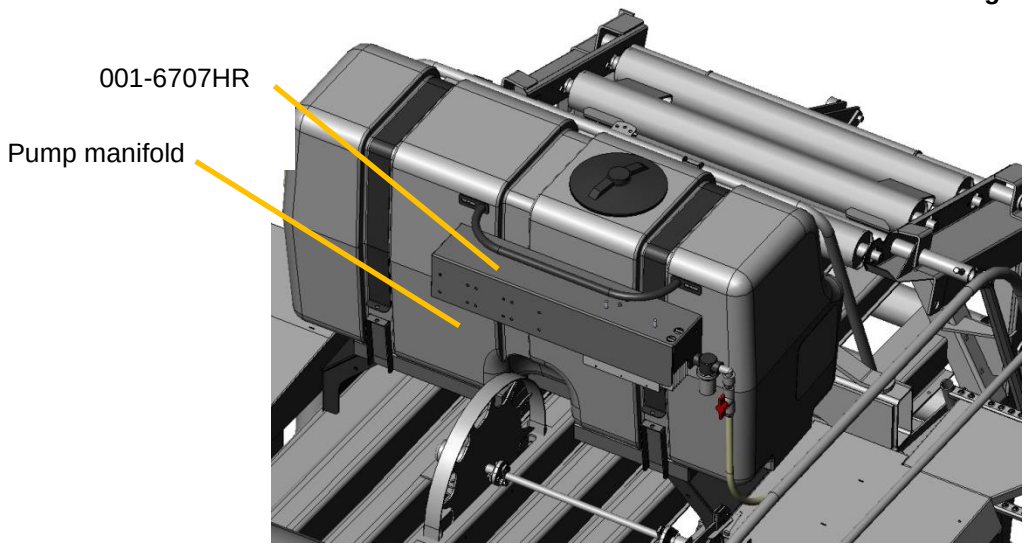

1. Locate and attach the filter bowl assembly to the outside of the pump manifold. Remove the four flange bolts that connect the two parts of the pump manifold together. Figure 4
2. Connect the pump manifold mounting bracket to the tank and secure with six 3/8" x 3/4" flange bolts. Reinstall the other half of the pump manifold and secure with four 3/8" x 3/4" flange bolts. Figure 4
3. Install the handrail (001-6707HR) above the pump manifold using two 3/8" x 3/4" flange bolts. Figure 4
4. Install the Pump Controller (006-5672) on to the pump manifold. Secure using two 5/16" lock washers, flat washers and hex nuts. Figure 1
5. Locate the 1/2" (13mm) hose and connect the filter bowl assembly to the sump tank fitting using the supplied two hose clamps. Figure 4

The Pump Controller and pump heads must be pointing down. Failure to mount the pump plate assembly in this specified direction will void all warranty of the Pump Controller and pumps

Installation of Dual Channel Processor (DCP)

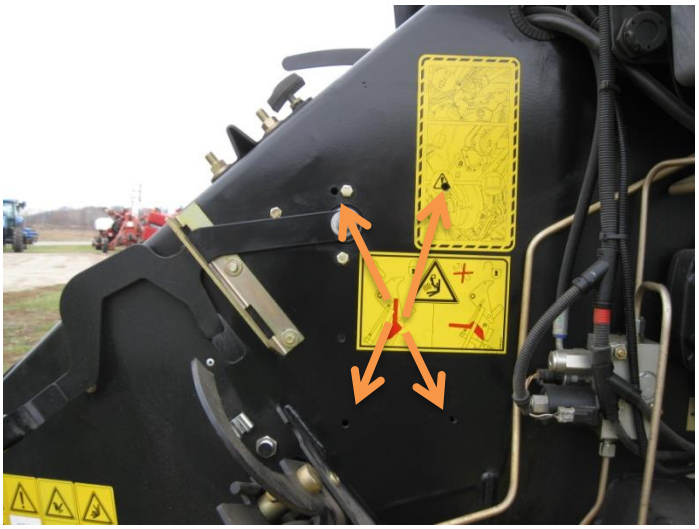

Figure 5

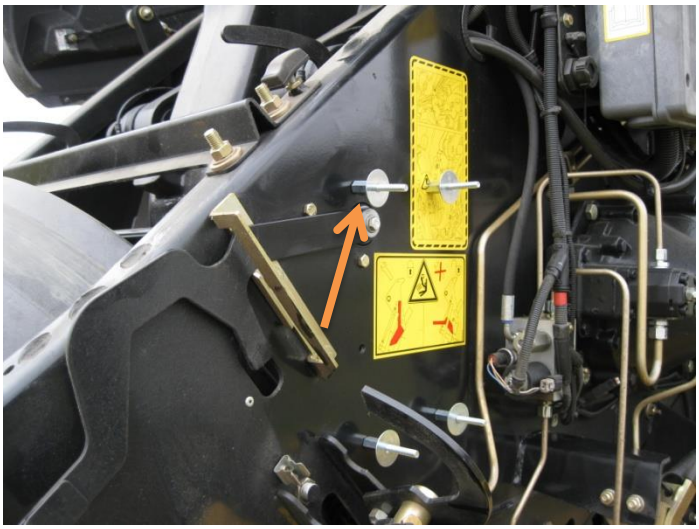

Figure 6

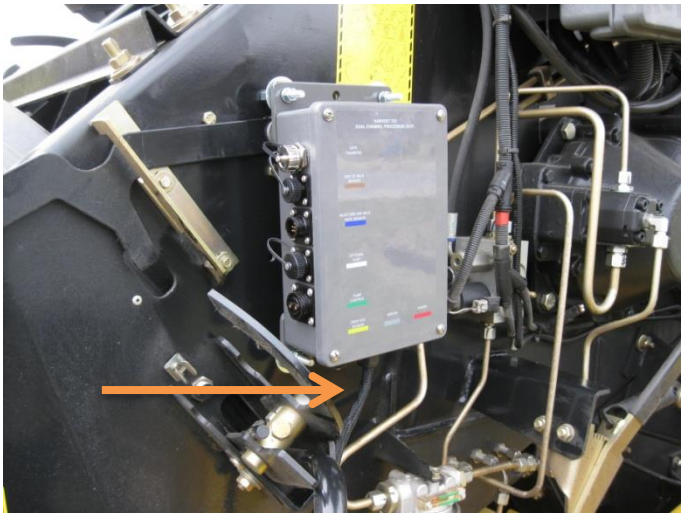

Figure 7

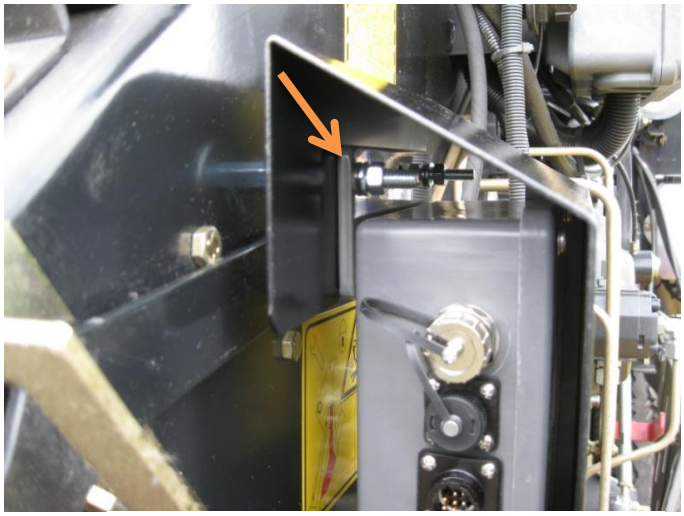

Figure 8

1. Locate the Dual Channel Processor (DCP) 006-6671LS.
2. Lock the baler flywheel brake and lift open the front hood.
3. Locate the four holes by the fly wheel brake. (Figure 5)
4. Use four 5/16” x 3” hex bolts with four flat washers (positioning bolt heads on the inside of the baler frame) and secure to the baler with four 1 1/8” threaded standoffs that will be on the outside of the baler frame, Position four fender washers between the DCP and standoffs (Figure 6.)
5. Mount the DCP with the display cable pointed down to the baler. (Figure 7)
6. Attach lock washers and hex nuts to mount the DCP to the baler. Do not tighten down yet (Figure 7)
7. Before tightening hardware install the DCP shield (001-5650X) over the top two 5/16” bolts between the fender washers and the mounting plate of the DCP. And finally tighten all hex nuts. (Figure 8)

Installation of Star Wheel Moisture Sensors

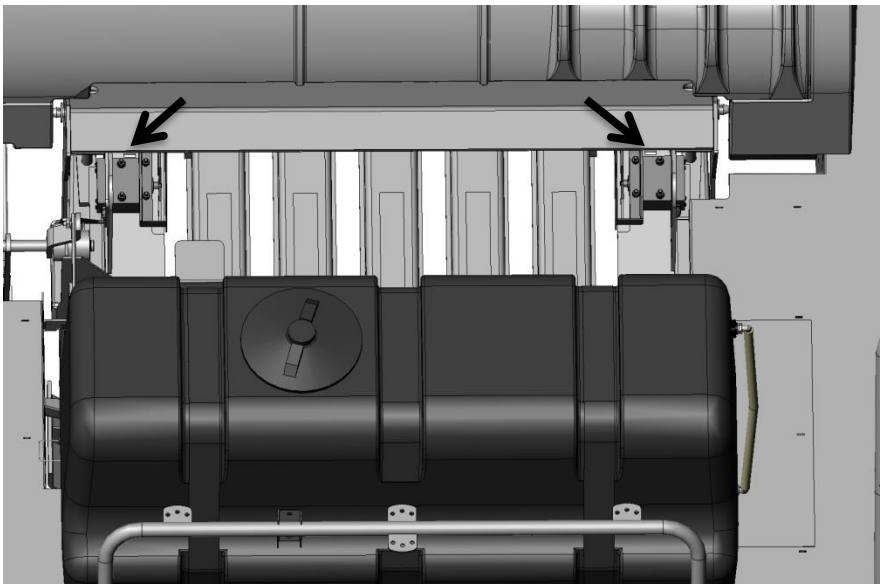

Figure 9

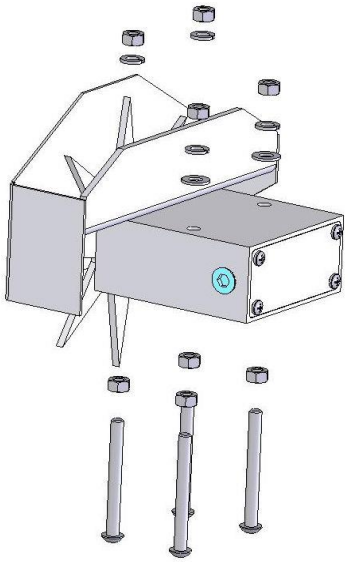

Figure 10

1. Locate the two star wheel moisture sensors (030-4641) and twine diverters (001-4644 & 001-4645)
2. Directly behind the knotters, locate the four predrilled holes per side shown at the arrows. This location is also beneath the lift points on top of the baler. Figure 9
3. Install the eight (four per side) 5/16” x 3” Allen head cap screws. Make sure the Allen heads are in the bale chamber. Secure using eight 5/16” hex nuts. Figure 10
4. Install the star wheels below the lift points on the baler.
5. Install the twine diverters over the star wheel sensor. The twine diverter with two extra sensors will be installed on the right star wheel.
6. Secure the star wheels and twine diverters with four 5/16” hex nuts, lock washers, and two flat washers. Figure 10

Installation of End of Bale Sensor

The end of bale sensor determines the position of the needles on the baler. When the needles cycle the sensor communicates this information to the Dual Channel Processor. This information is used for job records and will be used by the optional Bale Identification system.

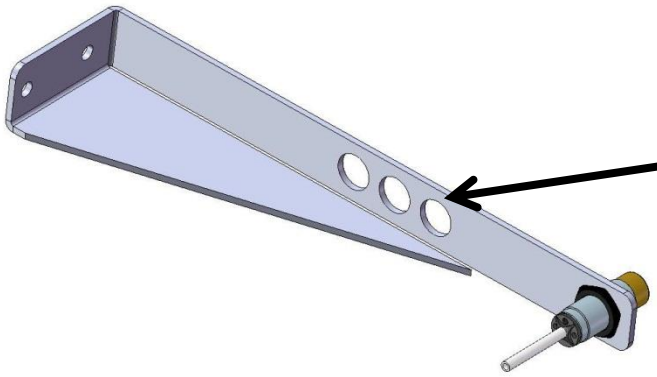

New Big Balers utilize the second position for the End of Bale Sensor.

Figure 11

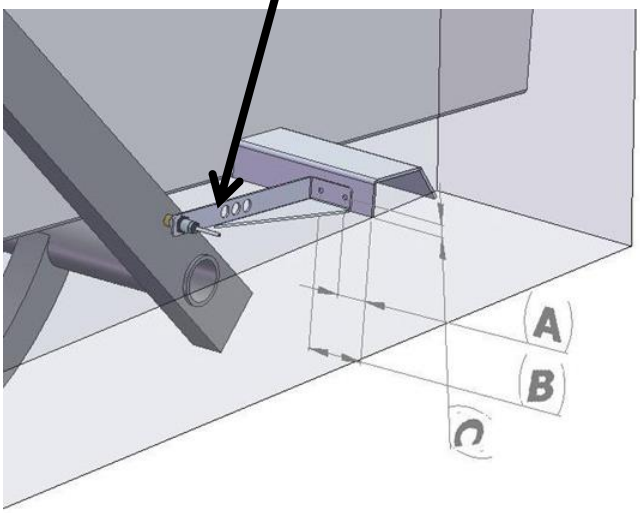

A	B	C
2-7/9”	4-3/8”	5/8”

Figure 12

Mount the end of bale sensor bracket (001-4648) as shown (figure 11-12) on the ladder side of the baler (and same side as the main controller). Mark and drill two 3/8” (10mm) holes and attach the bracket using two 5/16” x 1” self-tapping screws, and 5/16” flange nuts. Keep the sensor 1/4" (7mm) from the needle and tighten both nuts. New BB Balers have been installing the End of Bale Sensor in the second position and trimming off the excess steel. Run the sensor cable (006-7400) and extension (006-7400BBEXT) up to the Dual Channel Processor (DCP) down the ladder side of the baler and secure it properly out of the way of any moving parts and hydraulics.

Installation of the Drain Fill Line

1. Thread 3/4” elbow fitting into end of tank.
2. Run hose from the elbow down the frame to the bottom of the baler (figure 13).
3. Drill 1/4” (7mm) holes to accept the valve holder bracket and use 5/16” x 1” self-tapping screws (figure 14).
4. Connect valve assembly to other end of hose. Place hose clamps on both ends.
5. Secure hose to frame using cable locks.

Figure 13

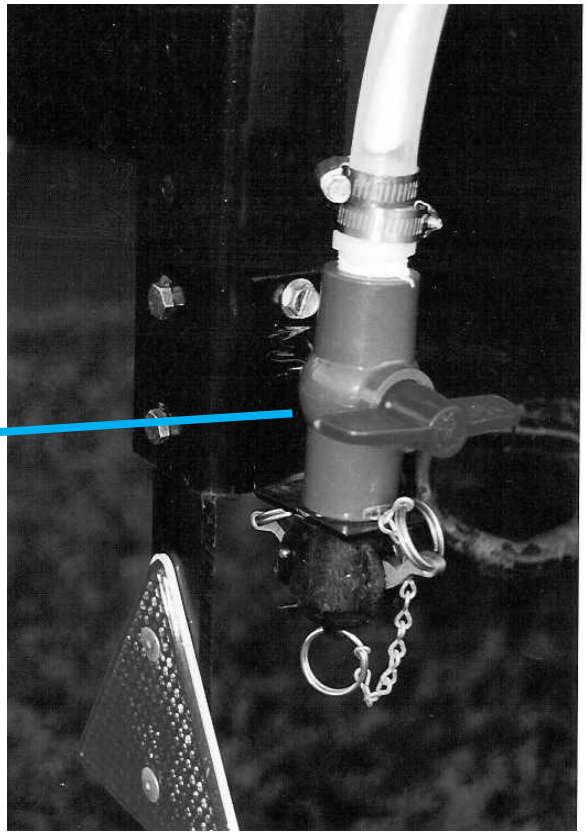

Figure 14

Installation of the Spray Shield

The spray shield assembly is designed to spray the hay evenly as the baler picks it up. A sketch of the spray shield nozzle holder is shown below.

BigBaler Standard and Packer Models
Installation Kit 4532B, 4533B & 4534B

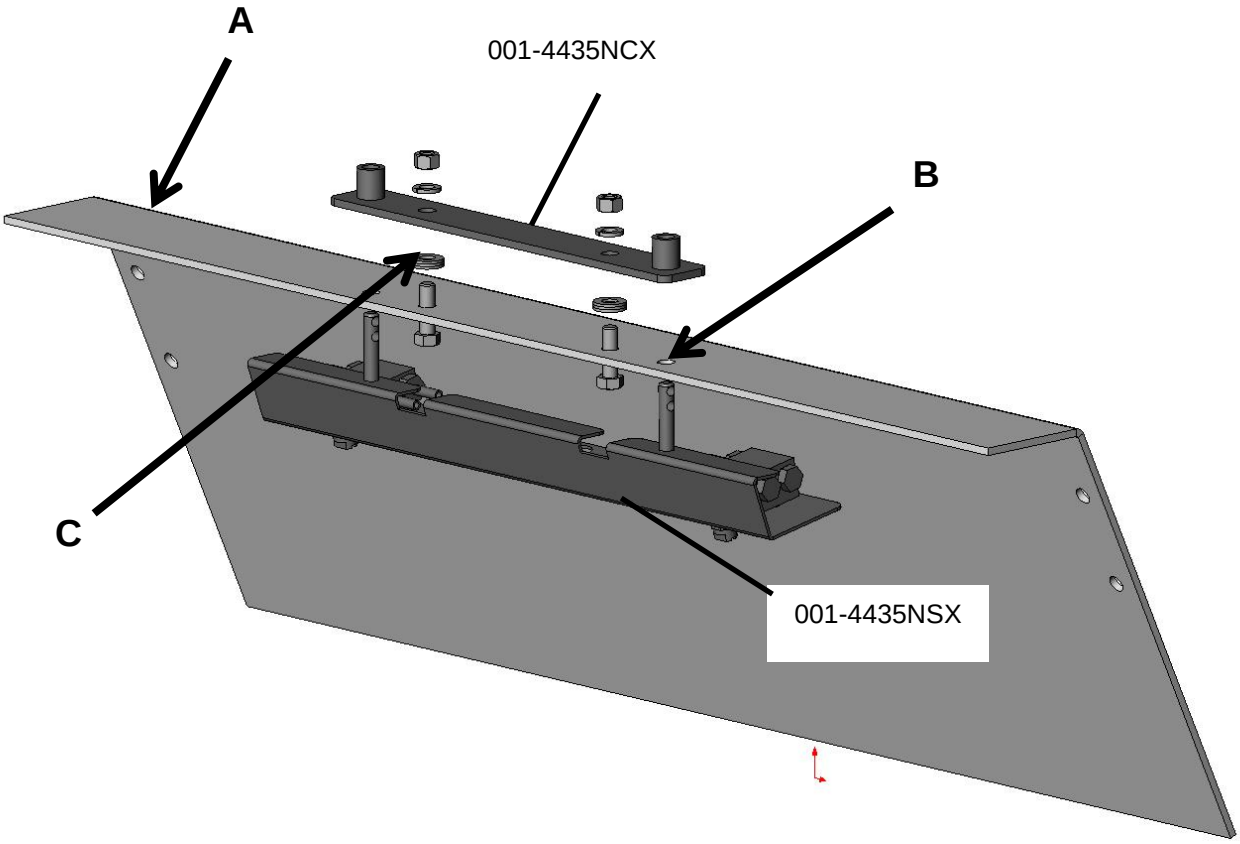

Figure 15

1. Locate the flat steel directly above the stuffer forks. Figure 15, Point A
2. Align the spray shield holder (001-4435NCX) to the center of the flat steel.
3. Using the shield holder (001-4435NCX) as a template clamp the holder to the baler, mark the four holes and drill them to 7/16” (9mm) diameter (figure 15 point B).
4. Attach the shield holder (001-4435NCX) to the baler through the two center holes using the two 3/8” x 1-1/4” hex bolts, six flat washers, two lock washers, and two hex nuts. Six washers (three per side) may need to go between the baler and the spray shield holder (figure 15 point C).
5. Install the spray shield (001-4435NSX) to the holder and secure by using two lynch pins. Remove washers if necessary (Point C), but allow for a tight fit.

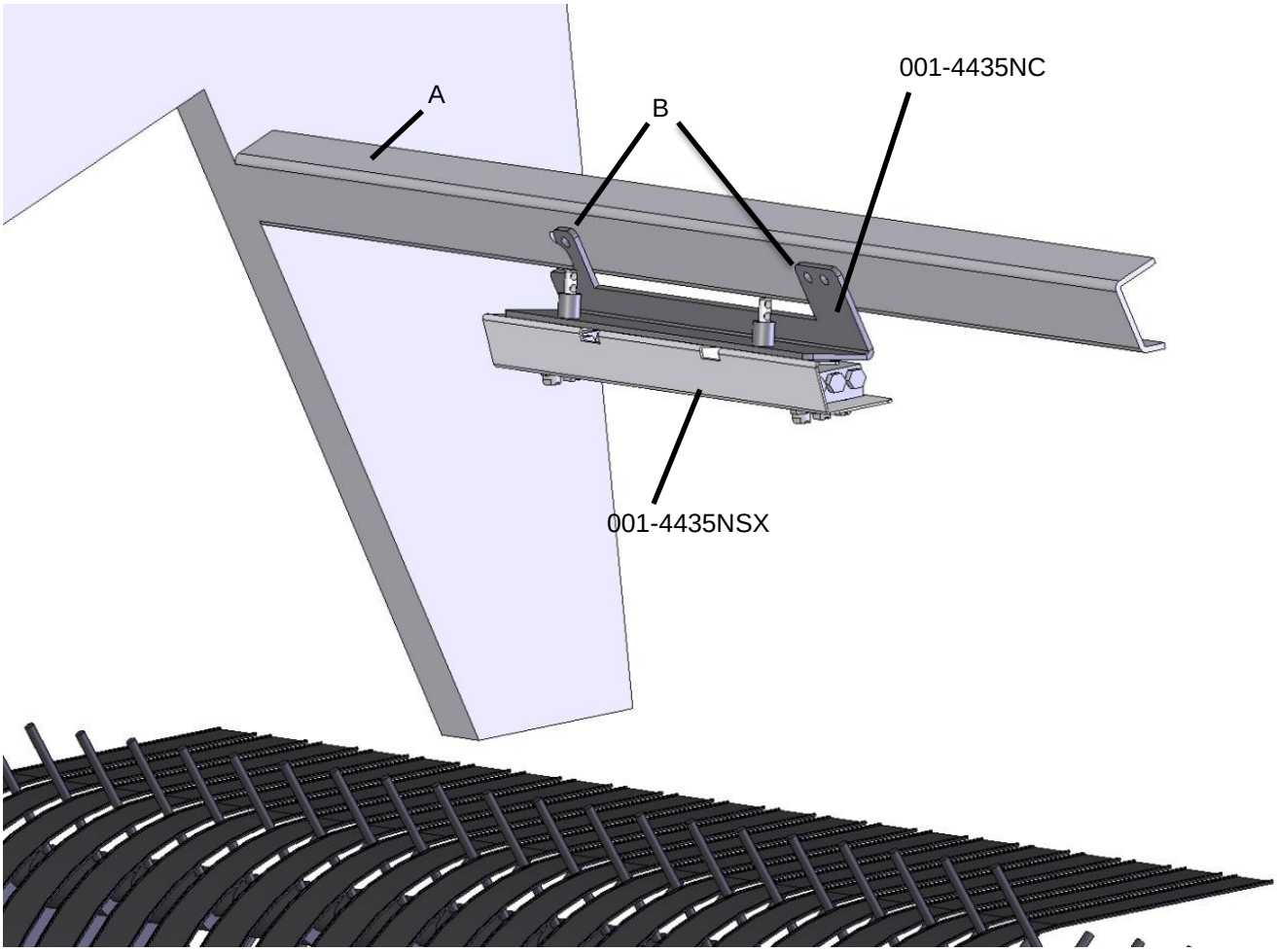

Figure 16

1. Locate the baler cross member directly above the rotor (figure 16 point A).
2. Locate the four pre-drilled holes on the cross member (figure 16 point B).
3. Install spray shield holder (001-4435NC) to baler using three 5/16” x 1” bolts, lock washers, hex nuts.
4. Install the spray shield (001-4435NSX) to the the shield holder (001-4435NC) and secure with supplied lynch pins.

Wind Guard Installation

3x3 Baler

Step 1: Locate the factory drilled holes on both sides of the baler tongue. The general location of these holes are shown in the image to the right. If holes are not present or a different location is desired, drill appropriately.

Step 2: Assemble the wind guard (030-6707WG3). Start by locating all materials listed previously. Next, align the 1/4'' (6mm) holes of the guard material (001-6707GM3) with the 1/4'' (6mm) holes of the 001-6707MER/MEL brackets. (*It is recommended to place the guard material on top of the brackets).*
Next align a 001-6707MF backing plate with the 1/4'' (6mm) holes on each end of the assembly. *(The rubber guard material should now be sandwiched between the mounting bracket and backing plate).*
Finally, fasten together with the 1/4'' hardware provided.

Step 3: Bring the assembled wind guard to the baler. Using the 5/16'' hardware, fasten the wind guard to baler using the outside holes of the brackets & the holes located or drilled from Step 1.

3x4 Baler

Step 1: Locate the ledge near the spray shield (1) and with 001-6707MA in hand, mark out drill locations for the two slots of the 6707MA bracket. Bracket should be as centered about the spray shield. If you're confident with drill locations, drill the two holes and move to step 2. Also note the factory drilled holes on the tongue of the baler (2), locate part 001-6707MC and ensure holes align on both sides.

Step 2: Assemble the wind guard (030-6707WG4). Start by locating the all of the materials listed above. Using the 1''x 1/4'' bolts and washers place the guard material (001-6707GM4) on the top bracket. Guard material should now be held in place with only the bolts. Locate part (001-6707MB) and place over protruding bolts, secure with flat washers and nuts. Note: Ensure the rubber guard material is placed on the top side of the of the 6707MA bracket.

Step 3: Again using the same hardware from step 2 fasten the guard material to the bottom bracket (001-6707MC) utilizing the remaining 001-6707MB backing bracket to clamp down the material.

Step 4: Bring assembled wind guard to the baler, it is recommended that you get another person to assist here. Start by securing the top bracket to the ledge where holes were previously drilled. Secure with 5/16 x 1'' hardware. Now locate the 5/16 x 1.5'' bolts. Use the bolts, flat washers and nuts to secure the bottom bracket to the baler factory drilled holes. Refer to finished install side view shown on the right.

Note: If installed correctly, the wind guard should not make contact with the fly wheel or center feed roll when the pick-up head is fully lifted.

Plumbing

A. Locate the three 1/4” (7mm) hoses colored clear, blue, and green. The pumps will need to be connected to specific tips (figure 17 and 18) so the pump numbers are as follows: Pump 1 is closest to the filter bowl, pump 2 is in the middle, and pump 3 is the outside pump.
B. Slide the jaco nut over the end the hose and insert the hose into the jaco fitting of the pump and tighten the jaco nut. Because all nozzles on the spray shield are different the operator will need to match the correct pump position with the correct nozzles and tip positions.
C. **KEEP HOSE AWAY FROM: MOVING PARTS, SHARP METAL AND HYDRAULIC LINES. WORKING TEMPERATURE FOR THE HOSE IS 140 ºF AND UNDER.**
D. Tie the hose down at secure locations on the baler using the enclosed tie straps and cable clamps.

High Output Tips for Rates Requiring 84-632 lbs/hr. (Approximately 21-63 tons/hr)

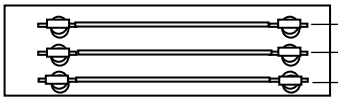

Red tips (Part #: 004-T8003-PT)	--Blue Hose	Pump 3
Brown tips (Part #: 004-T80015-PT)	--Green Hose	Pump 2
Pink tips (Part #: 004-T8001-PT)	--Clear Hose	Pump 1

Figure 17

Low Output Tips for Rates Requiring 44-400 lbs/hr. (Approximately 11-40 tons/hr)

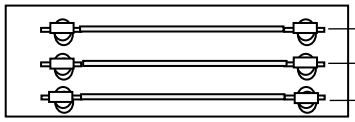

Brown tips (Part #: 004-T80015-PT)	--Blue Hose	Pump 3
Pink tips (Part #: 004-T8001-PT)	--Green Hose	Pump 2
Silver tips (Part #: 004-T800067-SS	--Clear Hose	Pump 1

Figure 18

Installation of Star Wheel and Bale Rate Harnesses

1. Remove the cover from the star wheel block and use a 1/4” nut driver to remove the nut from the electronic swivel.

2. Run the star wheel sensor wire through the black grommet and place the eye terminal on the star wheel sensor. Tighten the eye loop with the nut on the sensor and put the star wheel cover back on the base.

3. Tighten the grommet to form a tight seal around the wire. The bale rate sensors will be factory installed on the right side twine guard in the correct position. **The sensor with the longer sensor wire will say “FRONT”,** which indicates it should be placed in the front sensor hole closer to the front of the baler. The sensor with the shorter wire will say “BACK.”

The tip of the sensor should be placed no more than 1/4” (7mm) away from the star wheel teeth and no less than 1/8” (3mm) from the star wheel teeth. Each sensor will have an LED light located on the sensor by the diverter. Once the unit is powered up spin the wheel and make sure that both led lights turn on and off. If they don’t turn on and off, adjustments may need to be made.

4. Once the star wheel connection is complete, run the harness along the left side baler frame to the Dual Channel Processor (DCP). The Dual Channel Processor is located next to the flywheel brake.

Installation and Routing Wire Harnesses and Baler Interface Harness

Figure 19

Route harnesses along inside of the baler (figure 19). Keep harnesses away from moving parts and hydraulic hoses. Secure with existing cable clamps or use cable ties. When all connections are made to the DCP secure wires as shown above to allow for water to be shed away from the DCP.

Locate and remove the Active Terminator of baler (figure 20 and 21). Attach Baler Interface Harness (006-6650VA) to that location. Reconnect Active Terminator to open port of that same harness (006-6650VA)

Figure 20

Figure 21

Installation of iPad Integration Control

Locate a safe location in the cab of the tractor to place the iPad Integration Control (030-6672C). Recommended location is securely fastened out of the operators way in a location that is close enough to reach with the iPad cord.

Connect the Power / Communication harness (006-6650TM(E)) to the bottom of the receiver.

To operate the applicator, plug the iPad cord into the communication port indicated by:

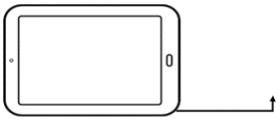

Made for iPad

iPad Integration Control Light Signals

Green Slow Blink – Power supplied to the applicator system and the unit is going through its startup process. This will take approximately 25-35 seconds.

Green Double Blink – Indicating the iPad module recognizes the iPad but the app is not open or connected.

Green Solid Light – Module is connected to the app and is ready to operate.

*Recommended to use the USB cable included with the applicator kit (006-6672USBC)

Bluetooth Receiver Lights

Pre-2020 applcaitors equipped with Bluetooth receivers (030-6672B) are now equipped with lights to indicate both power and Hay App connection on the Apple iPad. Clean light regularly

Blinking Lights – System is waiting for the processor to connect, which could take up to 35 seconds.

Red Light – The Bluetooth receiver has power

Green Light – The Bluetooth receiver is connected to the Hay App.

****600 Series Applicators with serial number before DCP27000 will require the DCP to be sent to Harvest Tec for a required update in order to use the iPad Integration Module (030-6672C).**

Hay App version must be **at least 2.5.18 (or higher)** to operate with the iPad Integration Module

***Made for Apple iPad badge**
Use of the Made for Apple iPad badge means that an accessory has been designed to connect specifically to the Apple product(s) identified in the badge and has been certified by the developer to meet Apple performance standards. Apple is not responsible for the operation of this device or its compliance with safety and regulatory standards.

Please note that the use of this accessory with an Apple product may affect wireless performance.

Wiring Diagram

A. The **Baler Power/Communication Harness** (006-6650LS) will attach to the open port of the Tractor **Harness** (006-6650TM(E)) and run back to the **Dual Channel Processor** (006-6671LS). Connect the large plug of the Baler Power/Communication Harness (006-6650LS) to the bottom (shorter side) of the DCP.
B. Attach the **Baler Interface Harness** (006-6650VA) in between the short whip cable hardwired to the DCP and the main Power/Communication Harness (006-6650LS). Make sure Active Terminator removed from the top of the baler processor is attached to Baler Interface Harness (006-6650VA).
C. Install green terminator (006-5650Z) to the port labeled **Modular Port** on the Pump Controller (006-5672).
D. Attach moisture and bale rate harness (006-7303HL(E)) as well as the end of bale harness (006-7400BBEXT) to the DCP (006-6671LS).
E. Attach the Pump Control Harness (006-5650F3M(E)) between the Pump Controller (006-5672) and the DCP (006-6671LS).
F. Connect Keyed Power Extension harness (006-5650K) to a keyed power source.
G. Connect the iPad Integration Control (030-6672C) to the Communication Harness (006-6650TM).
Note: The Optional Port and the Data Transfer Port are not used in this application.

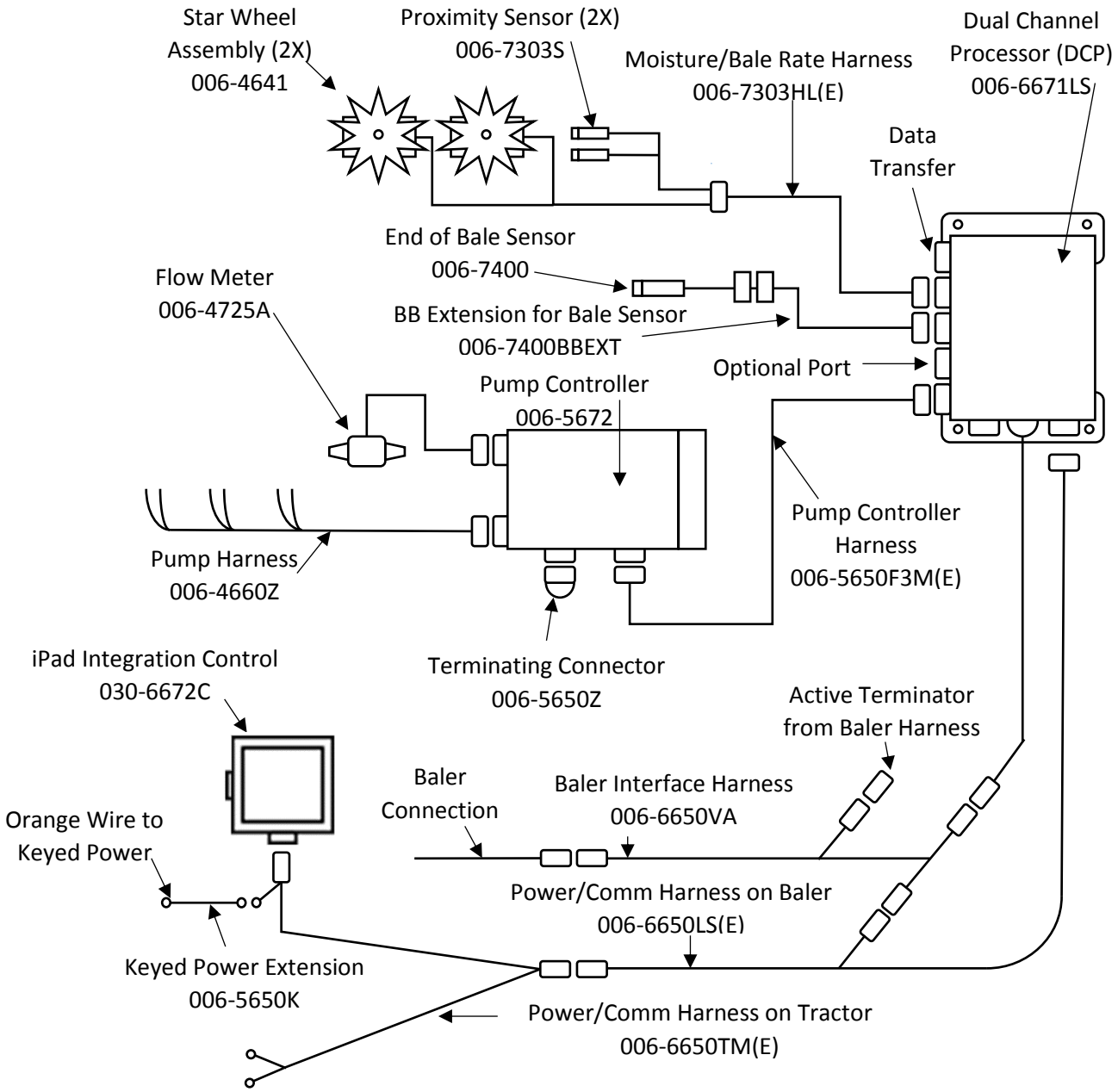

*Note: (E) indication is used for International Dealers

Pin Outs

Power/Comm Harness 006-6650TM at Hitch

Pin 1	Red	+12V Power to TSD
Pin 2	Red	+12V Power to DCP
Pin 3	Orange	Keyed Power
Pin 4	Gray	Shield
Pin 5	Green	HT Can Low
Pin 6	Yellow	HT Can Hi
Pin 7	Orange	Can1 Hi
Pin 8	Black	Ground from TSD
Pin 9	Black	Ground from DCP
Pin 10	Blue	Can1 Low

Power/Comm Harness 006-6650LS at Hitch

Pin 1	Red	+12V Power to TSD
Pin 2	Red	+12V Power to DCP
Pin 3	Orange	Keyed Power
Pin 4	Gray	Shield
Pin 5	Green	HT Can Low
Pin 6	Yellow	HT Can Hi
Pin 7	Orange	Can1 Hi
Pin 8	Black	Ground from TSD
Pin 9	Black	Ground from DCP
Pin 10	Blue	Can1 Low

iPad Integration Control / BLE on Harness 006-6650TM

Pin 1	Red	+12V Power from DCP
Pin 2	Black	Ground from TSD
Pin 3	Yellow	HT Can Low
Pin 4	Gray	Shield
Pin 5	Green	HT Can Hi
Pin 6	Orange	Can1 Hi
Pin 7	Blue	Can1 Low

006-6650VA to DCP Whip

Pin 1	Red	Can Power
Pin 2	Black	Can Ground
Pin 3	Yellow	HT Can Hi
Pin 4	Gray	Shield
Pin 5	Green	HT Can Low
Pin 6	Orange	Can1 Hi
Pin 7	Blue	Can1 Low

Pin Outs (continued)

006-6650VA to 006-6650 LS

Pin 1	Red	Can Power
Pin 2	Black	Can Ground
Pin 3	Yellow	HT Can Hi
Pin 4	Gray	Shield
Pin 5	Green	HT Can Low
Pin 6	N/A	
Pin 7	N/A	

006-6650VA Harness to Baler Plug

Pin A	N/A	
Pin B	Red	TBC Power
Pin C	N/A	
Pin D	Gray	TBC Ground
Pin E	Orange	Can1 Hi
Pin F	Blue	Can1 Low

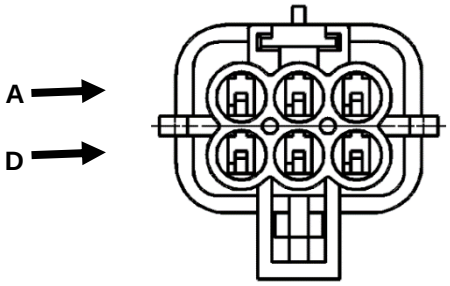

Main Power Connector on DCP

Pin 1	Red	+12V Power from tractor
Pin 2	Black	Ground from tractor
Pin 3	Orange	Keyed power

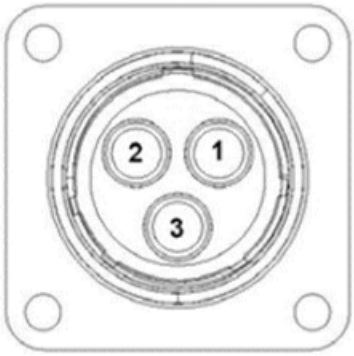

Star Wheel and Bale Rate Sensor Connector on DCP

Pin 1	Blue	+12V Power
Pin 2	Orange	Ground
Pin 3	Black	Signal for sensor 1
Pin 4	White	Signal for sensor 2
Pin 5	N/A	
Pin 6	N/A	
Pin 7	N/A	
Pin 8	Violet	Star wheel input 1
Pin 9	Brown	Star wheel input 2

End of Bale Sensor on DCP

Pin 1	Brown	Sensor Power
Pin 2	Blue	Sensor Ground
Pin 3	N/A	
Pin 4	Black	Signal from Sensor

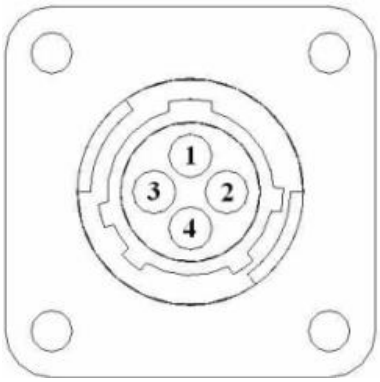

Pin Outs **(continued)**

Pump Communication Plug on DCP

Pin 1	Red	+12V Can
Pin 2	Red	+12V Power
Pin 3	Gray	Shield
Pin 4	Green	Comm Channel OH
Pin 5	Yellow	Comm Channel OL
Pin 6	Blue	Comm Channel IH
Pin 7	Orange	Comm Channel IL
Pin 8	Black	Can Ground
Pin 9	Black	Power Ground
Pin 10	N/A	

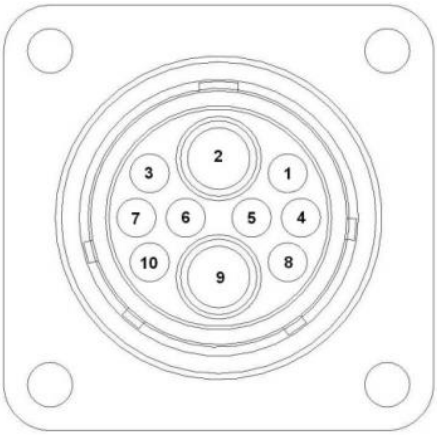

Pump Connection Colors

Pin 1	Black with Orange Stripe	Pump 1 Ground
Pin 2	Black with Green Stripe	Pump 2 Ground
Pin 3	Black with Yellow Stripe	Pump3 Ground
Pin 4	N/A	
Pin 5	Orange with Black Stripe	Pump 1 Positive
Pin 6	Green with Black Stripe	Pump 2 Positive
Pin 7	Yellow with Black Stripe	Pump 3 Positive

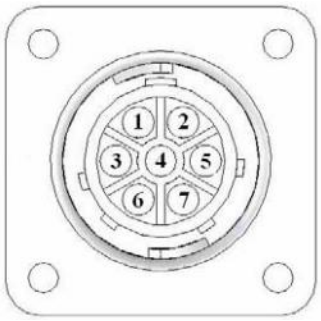

Flow Meter Connection on Pump Controller

Pin 1	White	+5-12V Power
Pin 2	Green	Ground
Pin 3	Brown	Signal
Pin 4	Black	Shield

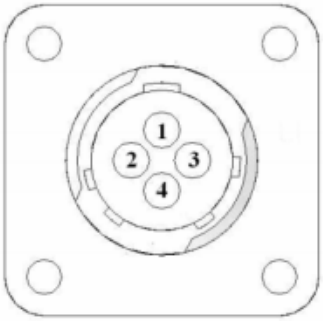

Connector for Crop Eyes on DCP

Pin 1	Red	+12V Power
Pin 2	Black	Ground
Pin 3	White	Signal
Pin 4	N/A	

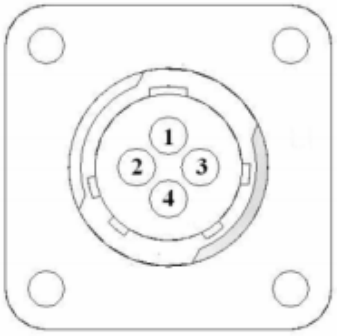

Parts Breakdown

Parts Breakdown for Tank, Saddle and Saddle Legs

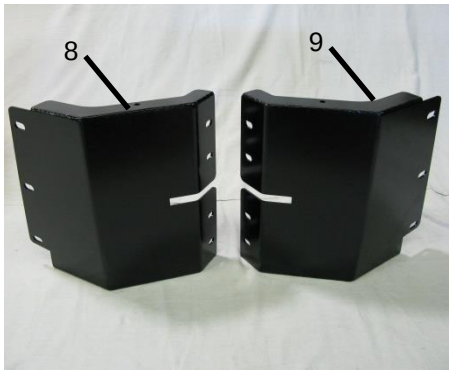

Ref	Description	Part Number	Qty	Ref	Description	Part Number	Qty
1	Tank	005-9218	1	9	Right saddle leg	001-6707MR	1
2	1/2" tank fitting	005-9104	2	10	1/2" hose	002-9001	2
3	Elbow	003-EL1212	2	**NP**	**Not Pictured:**		
4	Tank straps	001-6707P	2	NP	Elbow	003-EL3434	1
5	Tank saddle	001-6707N	1	NP	Elbow	003-EL3412	1
6	Handrail	001-6707HR	1	NP	3/4” tank fitting	005-9100	2
7	Tank lid	005-9022H	1	**O**	**Optional:**		
8	Left saddle leg	001-6707ML	1	O	Tank lid strainer	005-9022HBS	1

Parts Breakdown for Pump Manifold

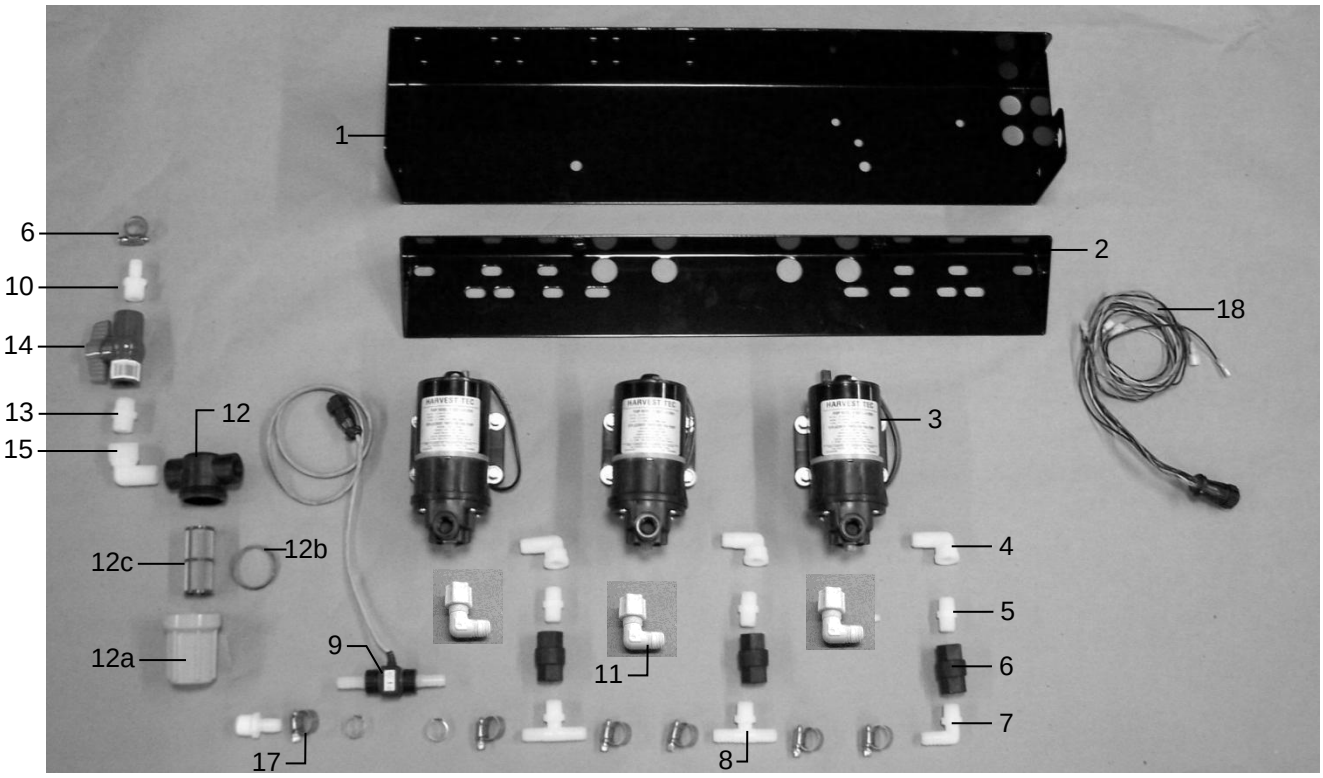

Ref#	Description	Part#	Qty
1	Pump plate	001-4646D	1
2	Mounting Bracket	001-4646C	1
3	Pump	007-4120H	3
4	Street elbow fitting	003-SE38	3
5	Nipple fitting	003-M3838	3
6	Check valve	002-4566F	3
7	Elbow fitting	003-EL3812	1
8	Tee fitting	003-T3812HB	2
9	Flow meter assembly	006-4725A	1
10	Straight fitting	003-A1212	2
11	Jaco fitting	003-JEL1238	3
12	Filter bowl assembly	002-4315-100	1
12a	Filter bowl only	002-4315F	1
12b	Filter bowl gasket	002-4315D	1
12c	Filter bowl screen	002-4315A	1
13	Nipple fitting	003-M1212	1
14	Ball valve	002-2212	1
15	Street elbow fitting	003-SE12	1
16	Hose clamp	003-9003	7
17	Hose clamp (Flow Meter)	003-9005	2
18	Pump Cable	006-4660Z	1
NP	Elbow	003-EL1212	1
NP	Pump rebuild kit (1 per pump)	007-4581	1
	Complete Pump Assembly	030-4646	

Star Wheel Moisture Sensor and Bale Rate Sensor

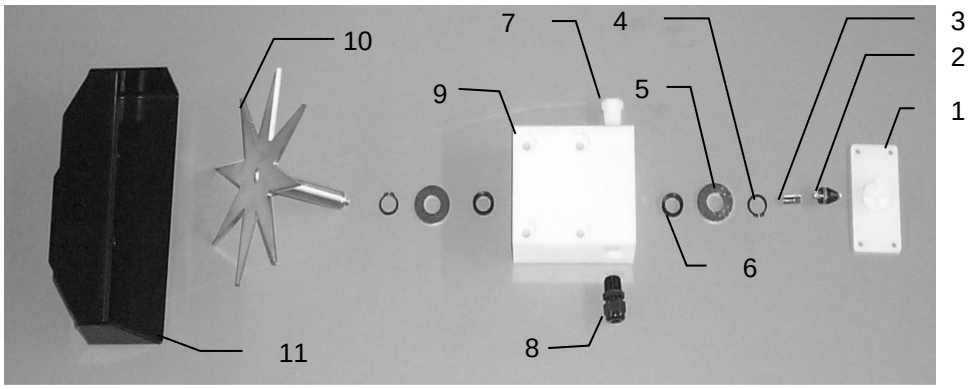

Ref	Description	Part Number	Qty	Ref	Description	Part Number	Qty
1	Block cover	006-4641B	2	9	Star wheel block	006-4641A	2
2	Electronic swivel	006-4642A	2	10	Star wheel sensor	030-4641C	2
3	Swivel insert	w/ Ref # 10	2	11	Twine guard-left	001-4645	1
4	Snap ring (per side)	006-4641K	2		Twine guard-right (prox)	001-4644	1
5	Washer (per side)	w/006-4641K	2		with bale rate sensor		
6	Dust seal (per side)	w/006-4641K	2		holes in it		
7	Plug fitting	003-F38	2	1-10	Star wheel assembly	030-4641	2
8	Wiring grommet	008-0821A	2				

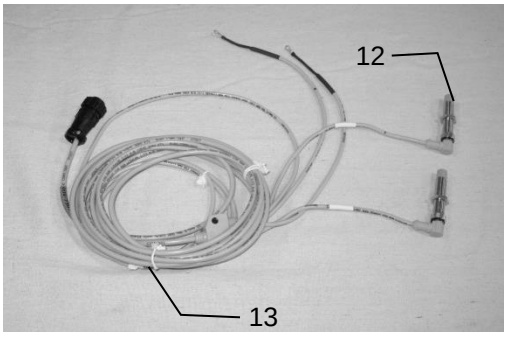

Ref	Description	Part Number	Qty
12	Bale rate sensor	006-7303S	2
13	Moisture and bale rate harness	006-7303HL(E)	1

*Note: (E) indication is used for International Dealers

Parts Breakdown for Hose and Drain Fill Line

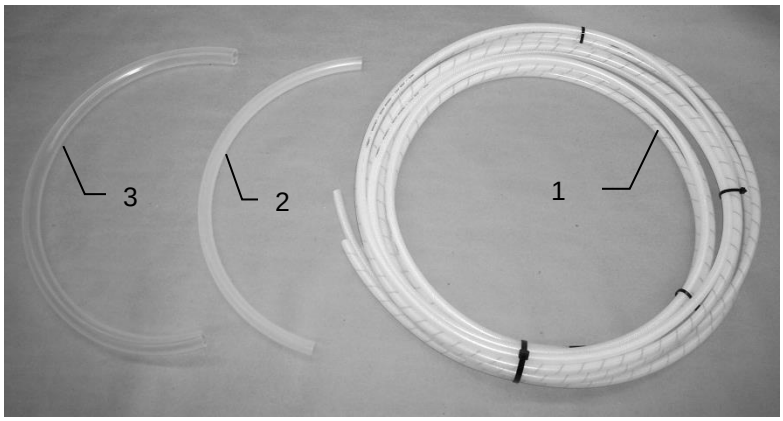

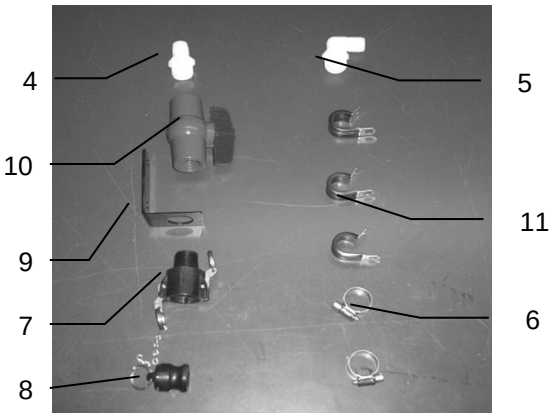

Ref	Description	Part Number	Qty	Ref	Description	Part Number	Qty
1	Triple weld hose (pumps to tips)	002-9016	25ft	7	Female Coupler	002-2204A	1
		002-9016B	25ft				
		002-9016G	25ft				
	Three hose assembly	030-9016LS	1				
2	1/2” Hose (tank to filter)	002-9001	6ft	8	Male Coupler	002-2205G	1
3	3/4” Hose (tank to drain/fill valve)	002-9002	10ft	9	Valve Holder	001-6702H	1
4	Straight Fitting	003-A3434	1	10	Ball valve	002-2200	1
5	Elbow	003-EL3434	1	11	Jiffy Clip	008-9010	3
6	Hose Clamps	003-9004	2				

Parts Breakdown for 697BB Series Controls and Harnesses
Dual Channel Processor (DCP)

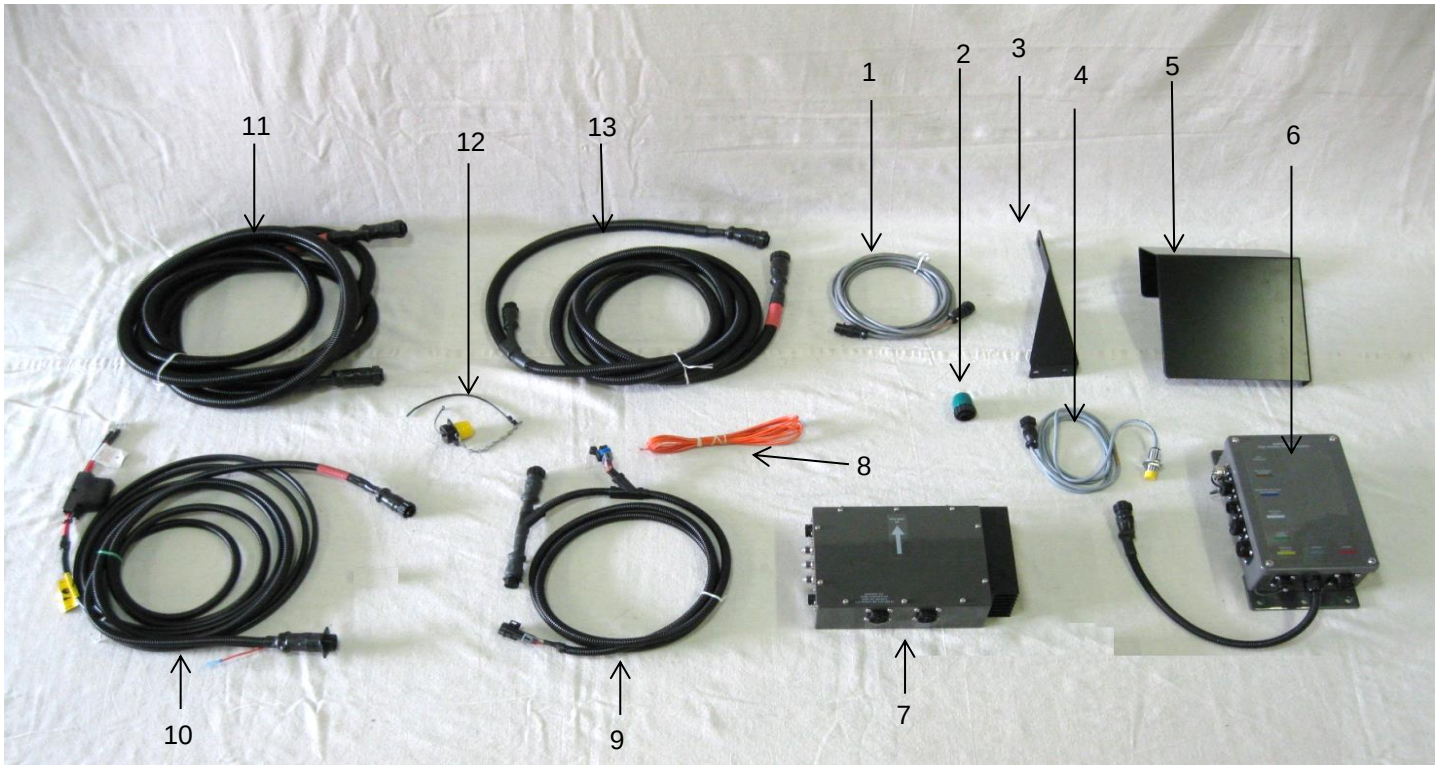

Ref	Description	Part Number	Qty
1	EOB Extension for CNH BB Series	006-7400BBEXT	1
2	Terminating Connector 600 Series	006-5650Z	1
3	End of Bale Sensor Bracket	001-4648	1
4	End of Bale Sensor 600 Series	006-7400	1
5	DCP Shield/Cover	001-5650X	1
6	DCP Main Control LS 600 AUTO	006-6671LS	1
7	Pump Controller	006-5672	1
8	Key Switch Wire	006-5650K	1
9	DCP Baler ISO/VT Harness	006-6650VA	1
10	DCP Tractor Harness	006-6650TM(E)	1
11	Modular Power/Comm 20 FT Harness	006-5650F3M(E)	1
12	Dust Plugs	006-5651PLUGS	1
13	DCP Baler Harness 15 FT	006-6650LS	1
NP	USB Cable	006-6672USBC	

*Note: (E) indication is used for International Dealers

Part #: 030-6672C

Harvest Tec Model 4532B, 4533B and 4534B Installation Kits
(4534B has longer EVA tubes between Manifold Blocks)

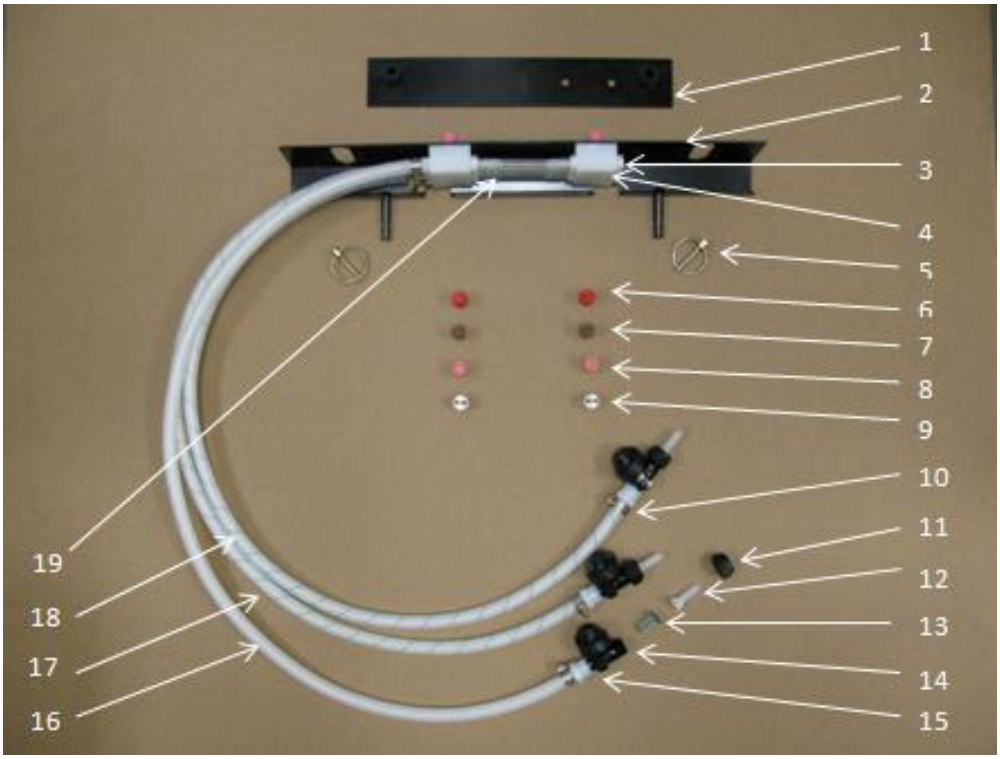

Ref	Description	Part Number	Qty	Ref	Description	Part Number	Qty
1	Holder	001-4435NCX	1	11	Cap	004-4723	3
2	Shield	001-4435NSX	1	12	Fitting	003-A1414VB	3
3	Fitting	003-F14	3	13	Strainer	004-1203-100	3
4	Manifold Block	001-4435NSB	2	14	Check Valve	004-1207VB	3
5	Lynch Pin	008-4576	2	15	Fitting	003-A1414F	3
6	Tip-Red	004-T8003-PT	2	16	Clear Tubing-1/4”	002-9016	3 ft
7	Tip-Brown	004-T80015-PT	2	17	Blue Stripe Tubing	002-9016B	3 ft
8	Tip-Pink	004-T8001-PT	2	18	Green Stripe Tubing	002-9016G	3 ft
9	Tip-Stainless	004-T800067-SS	2	19	EVA-1/4”	002-9006	* ft
10	Hose Clamp	003-9002	15		(*330 & LB334 use 1 ft, *340 & LB434 use 3 ft)		
				20	Leg Ext-Short Chamber (Included in 4532B Kits Only)	001-6707MX	2

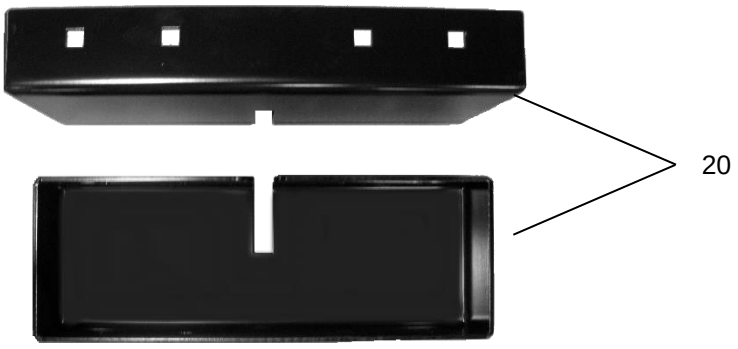

Harvest Tec Model 4535B and 4536B Installation Kit
(4536B has longer EVA tubes between Manifold Blocks)

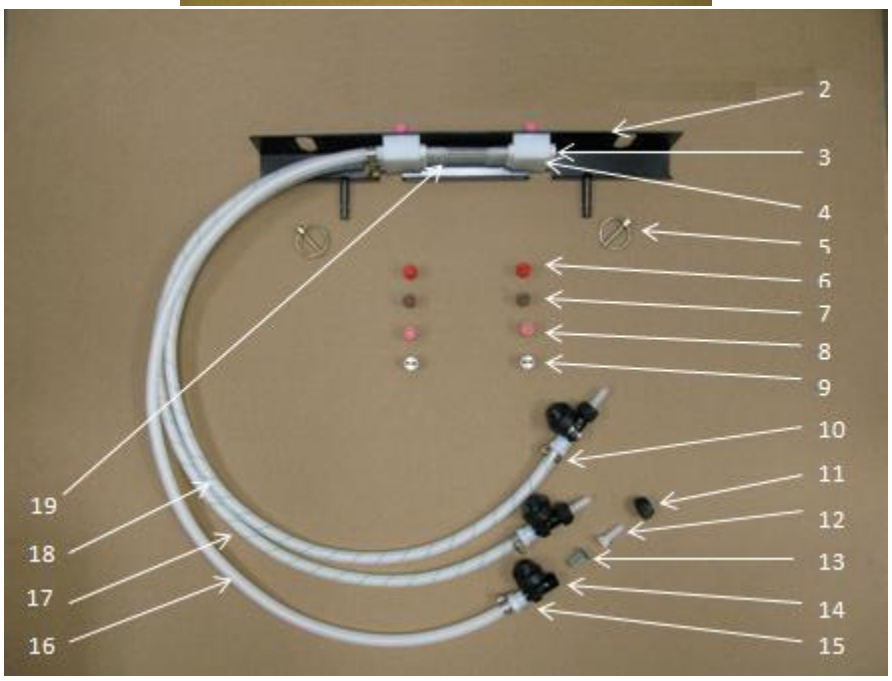

Ref	Description	Part Number	Qty	Ref	Description	Part Number	Qty
1	Holder	001-4435NC	1	11	Cap	004-4723	3
2	Shield	001-4435NSX	1	12	Fitting	003-A1414VB	3
3	Fitting	003-F14	3	13	Strainer	004-1203-100	3
4	Manifold Block	001-4435NSB	2	14	Check Valve	004-1207VB	3
5	Lynch Pin	008-4576	2	15	Fitting	003-A1414F	3
6	Tip-Red	004-T8003-PT	2	16	Clear Tubing-1/4”	002-9016	3 ft
7	Tip-Brown	004-T80015-PT	2	17	Blue Stripe Tubing	002-9016B	3 ft
8	Tip-Pink	004-T8001-PT	2	18	Green Stripe Tubing	002-9016G	3 ft
9	Tip-Stainless	004-T800067-SS	2	19	EVA-1/4”	002-9006	* ft
10	Hose Clamp	003-9002	15				

*330 & LB334 use 1 ft
*340 & LB434 use 3 ft

Harvest Tec Model 4635B Installation Kit
(Incudes 4535B & 6707WG3 Kits)

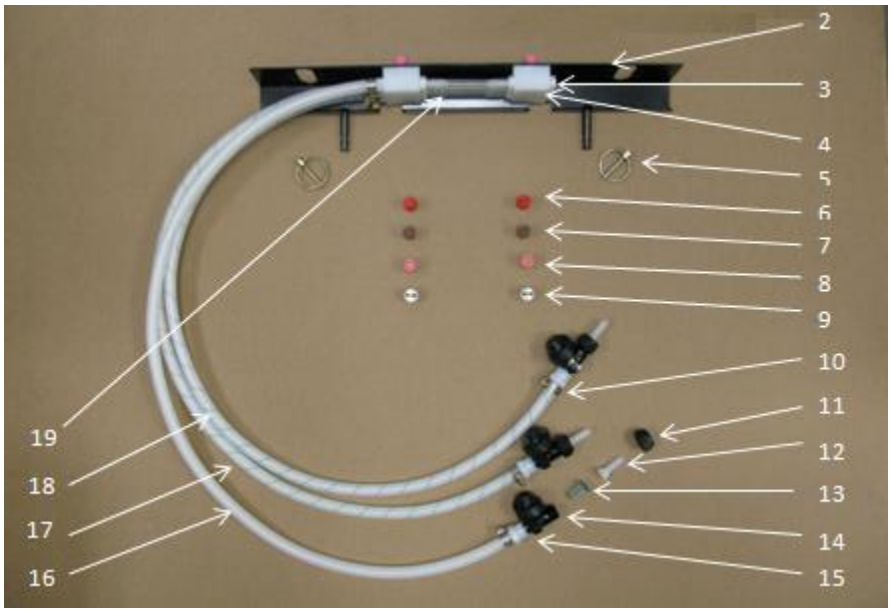

Ref	Description	Part Number	Qty	Ref	Description	Part Number	Qty
1	Holder	001-4435NC	1	11	Cap	004-4723	3
2	Shield	001-4435NSX	1	12	Fitting	003-A1414VB	3
3	Fitting	003-F14	3	13	Strainer	004-1203-100	3
4	Manifold Block	001-4435NSB	2	14	Check Valve	004-1207VB	3
5	Lynch Pin	008-4576	2	15	Fitting	003-A1414F	3
6	Tip-Red	004-T8003-PT	2	16	Clear Tubing-1/4”	002-9016	3 ft
7	Tip-Brown	004-T80015-PT	2	17	Blue Stripe Tubing	002-9016B	3 ft
8	Tip-Pink	004-T8001-PT	2	18	Green Stripe Tubing	002-9016G	3 ft
9	Tip-Stainless	004-T800067-SS	2	19	EVA-1/4”	002-9006	1 ft
10	Hose Clamp	003-9002	15		Shield Assembly (Ref 1-19)	030-4535B	

Wind Guard Assembly (3ft Baler)

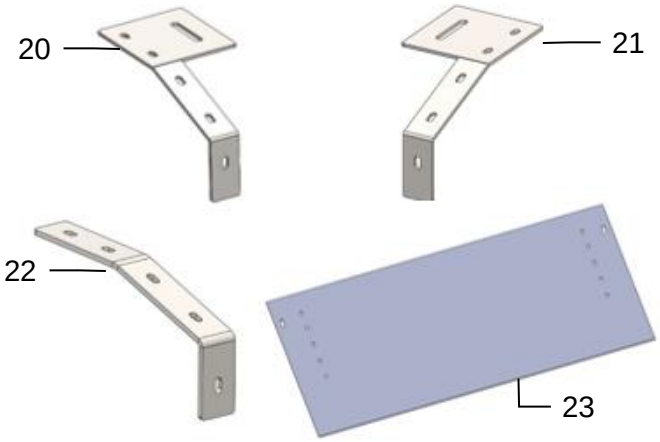

Ref	Description	Part Number	Qty
20	Wind Guard Right Bracket	001-6707MER	1
21	Wind Guard Left Bracket	001-6707MEL	1
22	Backing Plate	001-6707MF	2
23	3’ Wind Guard Flap	001-6707GM3	1
	Wind Guard Kit (Ref 20-23)	030-6707WG3	
	Complete 4635B Assembly (Ref 1-23)	**030-4635B**	

Harvest Tec Model 4636B Installation Kit
(Incudes 4536B & 6707WG4 Kits)

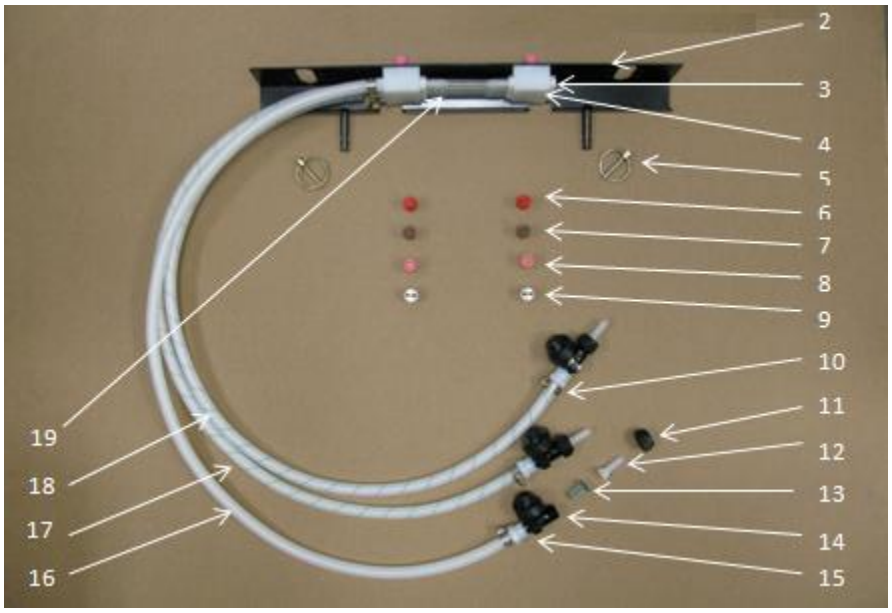

Ref	Description	Part Number	Qty	Ref	Description	Part Number	Qty
1	Holder	001-4435NC	1	11	Cap	004-4723	3
2	Shield	001-4435NSX	1	12	Fitting	003-A1414VB	3
3	Fitting	003-F14	3	13	Strainer	004-1203-100	3
4	Manifold Block	001-4435NSB	2	14	Check Valve	004-1207VB	3
5	Lynch Pin	008-4576	2	15	Fitting	003-A1414F	3
6	Tip-Red	004-T8003-PT	2	16	Clear Tubing-1/4”	002-9016	3 ft
7	Tip-Brown	004-T80015-PT	2	17	Blue Stripe Tubing	002-9016B	3 ft
8	Tip-Pink	004-T8001-PT	2	18	Green Stripe Tubing	002-9016G	3 ft
9	Tip-Stainless	004-T800067-SS	2	19	EVA-1/4”	002-9006	3 ft
10	Hose Clamp	003-9002	15		Shield Assembly (Ref 1-19)	030-4536B	

Wind Guard Assembly (4ft Baler)

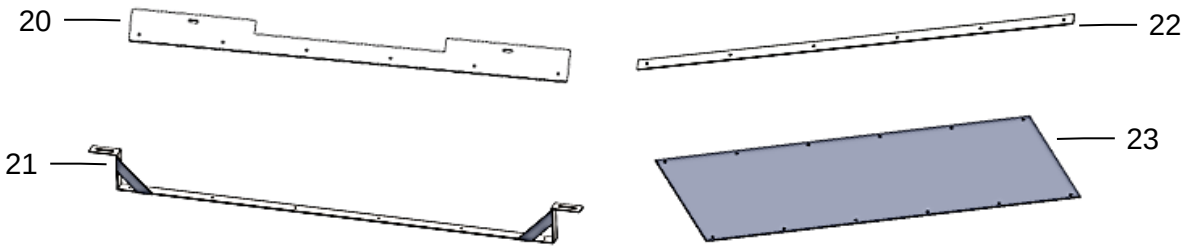

Ref	Description	Part Number	Qty	Ref	Description	Part Number
20	Wind Guard Top Bkt	001-6707MA	1		Wind Guard Kit (Ref 20-23)	030-6707WG4
21	Wind Guard Bottom Bkt	001-6707MC	1			
22	4’ Wind Guard Flap	001-6707GM4	1		**Complete 4636B Assembly (Ref 1-23)**	**030-4636B**
23	Backing Plate	001-6707B	2			

Optional iPad Mini Mounting Kit (030-2014MK)

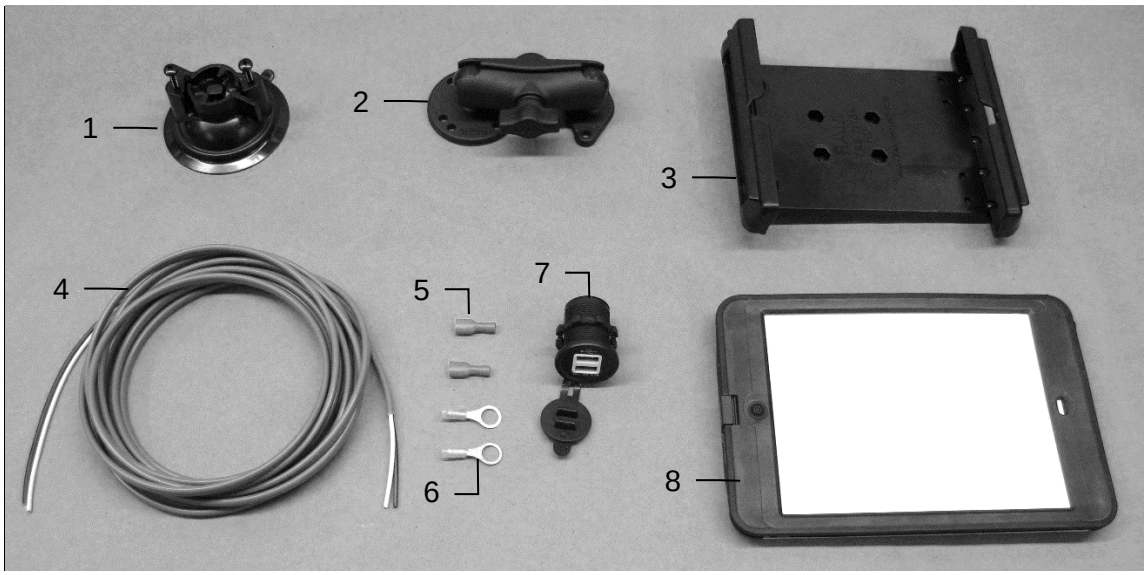

Ref	Description	Part #	Qty
1	Suction cup mount	001-2012SCM	1
2	Ram mount	001-2012H	1
3	iPad Mini® spring load cradle (Mini 4)	001-2012SLC	1
4	16 gauge power wire	006-4723P	1
5	Female spade connector	Hardware	2
6	Eye loop connector	Hardware	2
7	iPad Mini Charger 12V	001-2012P	1
8	iPad Mini 4 case	001-2012C4	1
NP	4 amp fuse	Hardware	1
	Mounting Kit Assembly	030-2014MK (Includes All Parts)	

Installation Instructions

1. Identify 12V power source for wires to connect.
    a. Eye loops included if wiring directly to the battery is desired.
    b. Test for key power source if preferred to have power to the USB shut off with the key.
2. Once power source is identified, cut wires to desired length.
3. Crimp the two supplied quick connectors onto each the white and black wire.
4. Remove the round locking plastic nut from USB plug before connecting the wires. Black (+) White (-).
5. The wires will then be hooked to the designated terminals on the bottom of the USB plug
6. Drill a 1 1/8” hole in the preferred mounting location. Be sure to clean any sharp edges after drilling.
7. Feed the wires through the mounting hole.
8. If using the round plastic nut to secure plug in place, slide the nut back over the wiring before connecting the wires to powered source.
9. Connect the wires to the identified power source if easier to do so before tightening the plug into place.
10. Tighten plug using either the round plastic nut or mounting plate and two screws, both options supplied.
11. Once connected, hook a USB charging cord into the plug and connect a mobile device/tablet to ensure the plug is operating as you wish (key power working properly if necessary).

NOTE: This plug is not designed to charge two iPads. System damage could occur if this is attempted. System will charge a mobile phone and iPad simultaneously without problem.

*iPad mini is a trademark of Apple Inc., registered in the U.S. and other countries.

Optional iPad Display Kit (030-4670DK)

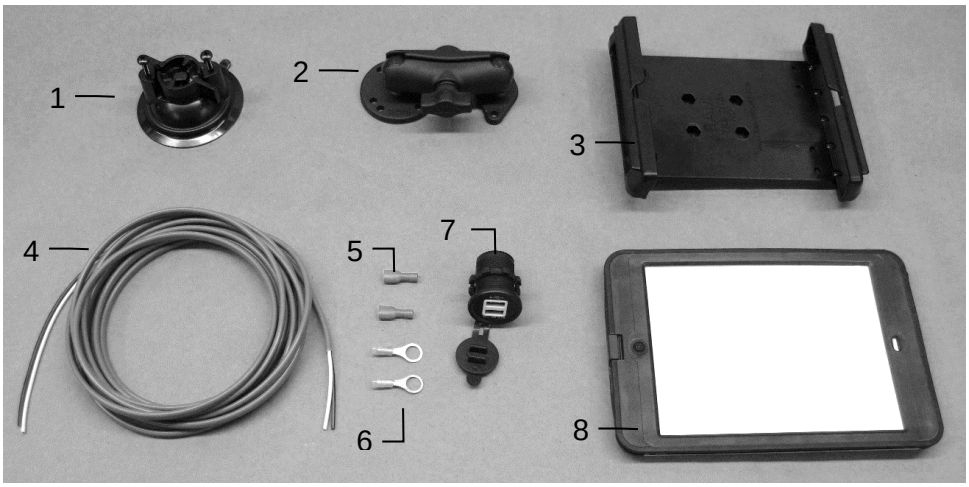

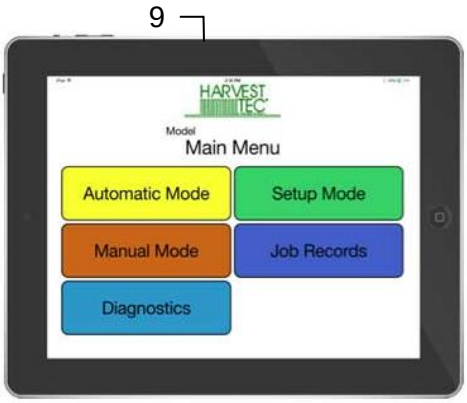

Ref	Description	Part #	Qty	Ref	Description	Part #	Qty
1	Suction cup mount	001-2012SCM	1	7	iPad Mini Charger 12V	001-2012P	1
2	Ram mount	001-2012H	1	8	iPad Mini 4 case	001-2012C4	1
3	iPad Mini® spring load cradle (Mini 4)	001-2012SLC	1	9	iPad Mini 4	006-4670IP	1
4	16 gauge power wire	006-4723P	1	NP	4 amp fuse	Hardware	1
5	Female spade connector	Hardware	2				
6	Eye loop connector	Hardware	2		Mounting Kit Assembly	030-4670DK (Includes All Parts)	

Installation Instructions

1. Identify 12V power source for wires to connect.
    a. Eye loops included if wiring directly to the battery is desired.
    b. Test for key power source if preferred to have power to the USB shut off with the key.
2. Once power source is identified, cut wires to desired length.
3. Crimp the two supplied quick connectors onto the white and black wire.
4. Remove the round locking plastic nut from USB plug before connecting the wires. Black (+) White (-).
5. The wires will then be hooked to the designated terminals on the bottom of the USB plug
6. Drill a 1 1/8” hole in the preferred mounting location. Be sure to clean any sharp edges after drilling.
7. Feed the wires through the mounting hole.
8. If using the round plastic nut to secure plug in place, slide the nut back over the wiring before connecting the wires to powered source.
9. Connect the wires to the identified power source if easier to do so before tightening the plug into place.
10. Tighten plug using either the round plastic nut or mounting plate and two screws, both options supplied.
11. Once connected, hook a USB charging cord into the plug and connect a mobile device/tablet to ensure the plug is operating as you wish (key power working properly if necessary).

NOTE: This plug is not designed to charge two iPads. System damage could occur if this is attempted. System will charge a mobile phone and iPad simultaneously without problem.

*iPad mini is a trademark of Apple Inc., registered in the U.S. and other countries.

Notes

Notes

Harvest Tec Inc. Warranty and Liability Agreement

Harvest Tec, Inc. will repair or replace components that are found to be defective within 12 months from the date of manufacture. Under no circumstances does this warranty cover any components which in the opinion of Harvest Tec, Inc. have been subjected to negligent use, misuse, alteration, accident, or if repairs have been made with parts other than those manufactured and obtainable from Harvest Tec, Inc.

Our obligation under this warranty is limited to repairing or replacing free of charge to the original purchaser any part that in our judgment shows evidence of defective or improper workmanship, provided the part is returned to Harvest Tec, Inc. within 30 days of the failure. If it is determined that a non-Harvest Tec branded hay preservative has been used inside the Harvest Tec applicator system where the failure occurred, then Harvest Tec reserves the right to deny the warranty request at their discretion. Parts must be returned through the selling dealer and distributor, transportation charges prepaid.

This warranty shall not be interpreted to render Harvest Tec, Inc. liable for injury or damages of any kind, direct, consequential, or contingent, to persons or property. Furthermore, this warranty does not extend to loss of crop, losses caused by delays or any expense prospective profits or for any other reason. Harvest Tec, Inc. shall not be liable for any recovery greater in amount than the cost or repair of defects in workmanship.

There are no warranties, either expressed or implied, of merchantability or fitness for particular purpose intended or fitness for any other reason.

This warranty cannot guarantee that existing conditions beyond the control of Harvest Tec, Inc. will not affect our ability to obtain materials or manufacture necessary replacement parts.

Harvest Tec, Inc. reserves the right to make design changes, improve design, or change specifications, at any time without any contingent obligation to purchasers of machines and parts previously sold.

Revised 4/17

HARVEST TEC, INC.
P.O. BOX 63
2821 HARVEY STREET
HUDSON, WI 54016
PHONE: 715-386-9100
1-800-635-7468
FAX: 715-381-1792