Installation Manual

Model 696A

110 Gallon Preservative Applicator

AGCO PARTS

HayBoss™ G2

696A-INST
5/22

(intentionally blank)

HayBoss G2 Model 696A Installation Table of Contents

Introduction

Thank you for purchasing a HayBoss G2 Model 696A Hay Preservative Applicator. This 696A applicator system has been designed to plug directly into the baler's ISOBUS and display on a C1000 monitor. The 696A Preservative Applicator System offers these advantages;

1. Operation coordinated with baler operation
2. Less cab clutter providing better visibility
3. Ease of use with all information on one screen
4. Records kept together
5. And the system is ready for future updates.

The 696A HayBoss G2 Preservative Applicator System is designed to apply buffered propionic acid to the forage crop as it is baled. The 696A applicator will adjust the rate of application based on moisture and tonnage of the crop being harvested. This manual will take you through the steps of installing the applicator. Please read this manual carefully to learn how to install the equipment correctly. Failure to do this can result in personal injury or equipment malfunction. If you are unsure about installing the system after consulting this manual, contact your local authorized dealership for additional assistance or look for the contact information on the back cover of this manual. If you are in need of parts for the system please view the Parts Breakdowns toward the back of this manual and contact your local authorized dealer to order the parts. This applicator is designed to apply AGCO buffered propionic acid.

Right and Left sides are determined by facing in the direction of forward travel.

System Requirements

The Baler Processor must have Version 3.3 or higher.
C1000 must have version 3.0.1 or higher

Installation Kit Reference Chart

BALER MAKE	MODEL	INSTALL KIT
AGCO Hesston	7433-7444	030-4518B
	7433-7434 roto-cutter	030-4519B
	2150 – 2190	030-4518B
	2150 – 2190 roto-cutter	030-4519B
	2150 – 2190 packer cutter	030-4527B
	2250 & 2270 ProCut	030-4542B
Challenger	LB33B – LB44B	030-4518B
	LB33B – LB34B roto-cutter	030-4519B
	LB33B – LB34B packer cutter	030-4527B
Massey Ferguson	2140 – 2290	030-4518B
	2140 – 2290 with roto-cutter	030-4519B
	2150 & 2250 packer cutter	030-4527B
	2170XD & 2270XD with roto-cutter	030-4530B

Tools Needed:

- Standard wrench set
- Crescent wrench
- Standard socket set
- Hose cutter
- Electric drill and bits
- Standard screwdriver
- Hammer
- Center punch
- Side cutter
- Standard nut driver set
- Metal cutting tools

Installation of Applicator

1. Installation of Pump Manifold and Saddle Pre-Setup

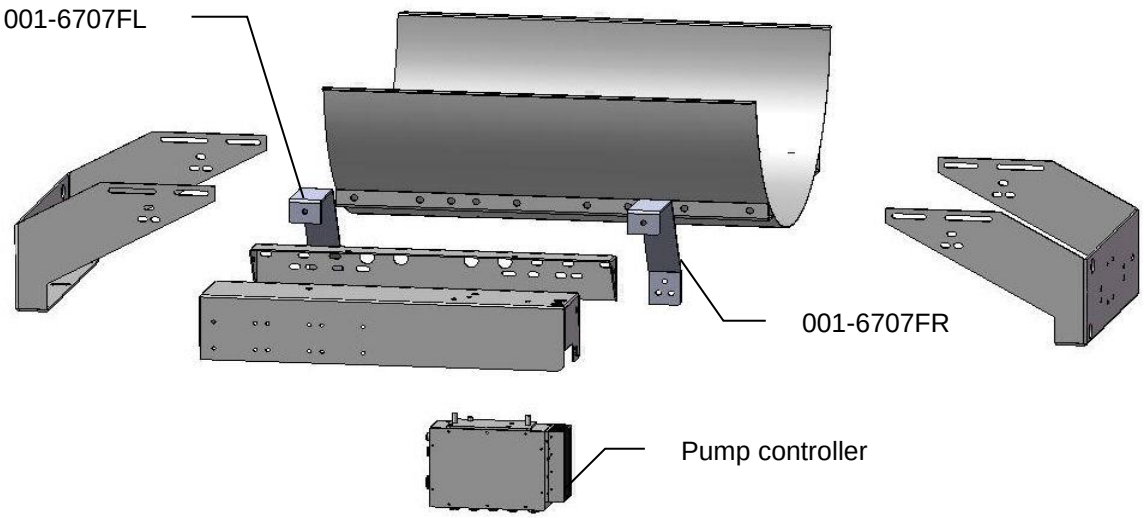

For 3 X 3 balers only

Locate parts bag 2. Install both saddle legs (001-6707C) onto the saddle (001-6707A) with eight 3/8" x 1-1/4" Bolts, locks and flat washers. Note: the slots in the legs will attach to the second and fourth weld nuts in from each end, of the saddle, on both sides.

1. Once legs and saddle are loosely attached measure the distance from the top outside corners of the bale chamber where the saddle will be attached. Move legs in or out so the outside edges will match this dimension. Also try to center the saddle within these dimensions. Do not fully tighten bolts until mounted on the baler
2. Locate parts bag 6. Mount the pump plate support legs (001-6707FL & 001-6707FR) to the saddle legs using six 3/8" x 1" bolts, locks, flats, and nuts. Note: this will be the side that is opposite of the "V" notch that is in the sump cut out of the saddle
3. Attach the pump plate mounting bracket (001-4646C) to the pump plate support legs with two 3/8" x 1-1/4" bolts, locks, flats, and nuts.
4. Attach the pump plate holder (001-4646D) to the pump plate mounting bracket (001-4646C) using four 3/8" x ¾" flange head bolts

For 3 X 4 and 4 x 4 balers only

Locate parts bag 2. Install both saddle legs (001-6707C) onto the saddle (001-6707A) with eight 3/8" x 1-1/4" Bolts, locks and flat washers. Note: the slots in the legs will attach to the first and second weld nuts in from each end, of the saddle, on both sides.

1. Once legs and saddle are loosely attached measure the distance from the top outside corners of the bale chamber where the saddle will be attached. Move legs in or out so the outside edges will match this dimension. Also try to center the saddle within these dimensions. Do not fully tighten down bolts until mounted on the baler.
2. Locate parts bag 6. Mount the pump plate support legs (001-6707FL & 001-6707FR) to the saddle legs using six 3/8" x 1" bolts, locks, flats, and nuts. Note: this will be the side that is opposite of the "V" notch that is in the sump cut out of the saddle
3. Attach the pump plate mounting bracket (001-4646C) to the pump plate support legs with two 3/8" x 1-1/4" bolts, locks, flats, and nuts.
4. Attach the pump plate holder (001-4646D) to the pump plate mounting bracket (001-4646C) using four 3/8" x ¾" flange head bolts

The Pump Controller and pump heads must be pointing down. Failure to mount the pump plate assembly in this specified direction will void all warranty of the Pump Controller and pumps

2. Installation of Dual Channel Processor (DCP)

Follow the instructions below to mount the Dual Channel Processor (DCP 006-6671LS) onto your specific baler model and type. The locations shown are the right twine box (looking at the back of the baler). Mark and drill the four 3/8” holes and install DCP with two 5/16” x 1” bolts in the bottom two holes, two 5/16” x 1-1/4” bolts in the top two holes, locks, fender washers and hex nuts. Leave bolts loose. Mount the DCP cover (001-5650X) to the top two 5/16” x 1-1/4” bolts. It will fit between the mounting foot of the DCP and the sheet metal of the baler. Now tighten all bolts.

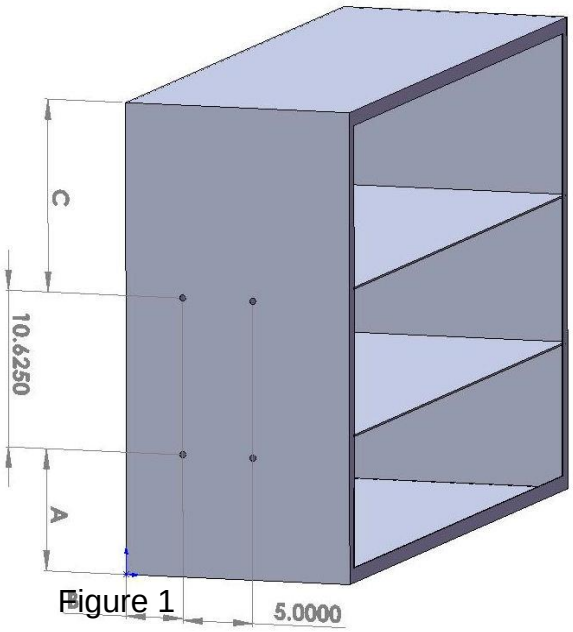

Figure 1

Baler Type	Model number	Figure	A	B	C
AGCO Hesston	7433 – 7444 2150 – 2190 2250 – 2290	2	12”	3”	N/A
Challenger	LB 33B – 44B	2	12”	3”	N/A
Massey Ferguson	2150-2190 2250-2290	2	12”	3”	N/A

3. Installation of Tank and Star Wheel Moisture Sensors

Tank Mounting-Locate parts bag C & 2. Mount the tank legs and saddle on the baler as shown below, just behind the compression arm. The tank legs bolt to the baler with six ½" x 1-3/4" carriage head bolts, lock & flat washers, and hex nuts. The bolts should be inserted from inside the baler.

The saddle is intentionally tipped forward by 5º so that the tank cap will be parallel to the ground. There is a small cut out "V" where the tank sump fits in the saddle and this cut out should face the back of the baler for the tank to be level when installed on the baler

Star Wheel Mounting-The star wheels are to be mounted on top of the baler, just behind the knotters and <u>under the walkway</u> on both sides. The notch and holes for the star wheel are precut. **If the star wheels are cutting the twine the sensors and notch must be moved out an additional ½ inch. Use the template in the back of the manual for hole spacing.** Place the spacer plate (001-6707E) over the precut holes. Attach with 5/16" x ½" Allen head bolts and internal star washers from inside the bale chamber. Center the star wheels over the top of the spacer plate, place the twine diverters on top of the star wheel and attach with 5/16 x 2 ¼ hex bolt and lock washers. For remainder two holes per star wheel attach with 5/16 x 2 ¼" hex bolt, lock washer, and one 5/16" thick flat washers per bolt. Verify that star wheels align with bale chamber before tightening down all hardware. **The twine guard containing the bale rate sensors will be placed on the right side of the baler.** See Step 8 for directions on how to hook-up the star wheel wires.

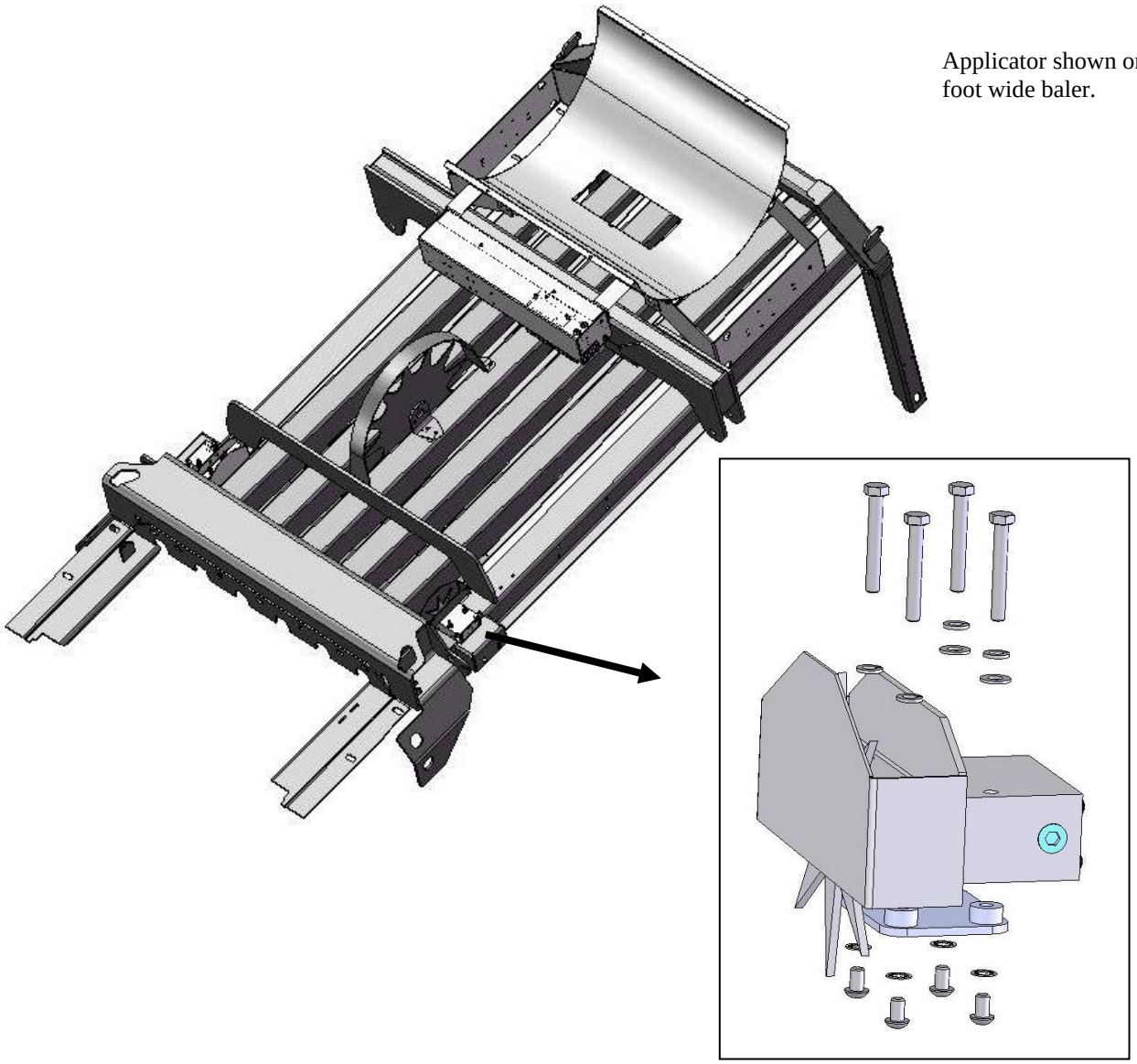

Applicator shown on four foot wide baler.

4. Installation of End of Bale Sensor

The end of bale sensor determines the position of the needles on the baler. When the needles cycle the sensor communicates this information to the Dual Channel Processor (DCP). This information is used for job records and will be used by the optional Bale Identification System. Follow the steps below for your baler to mount the sensor.

End of bale sensor bracket (001-4648) will be used. Cutoff excess metal not used during installation.

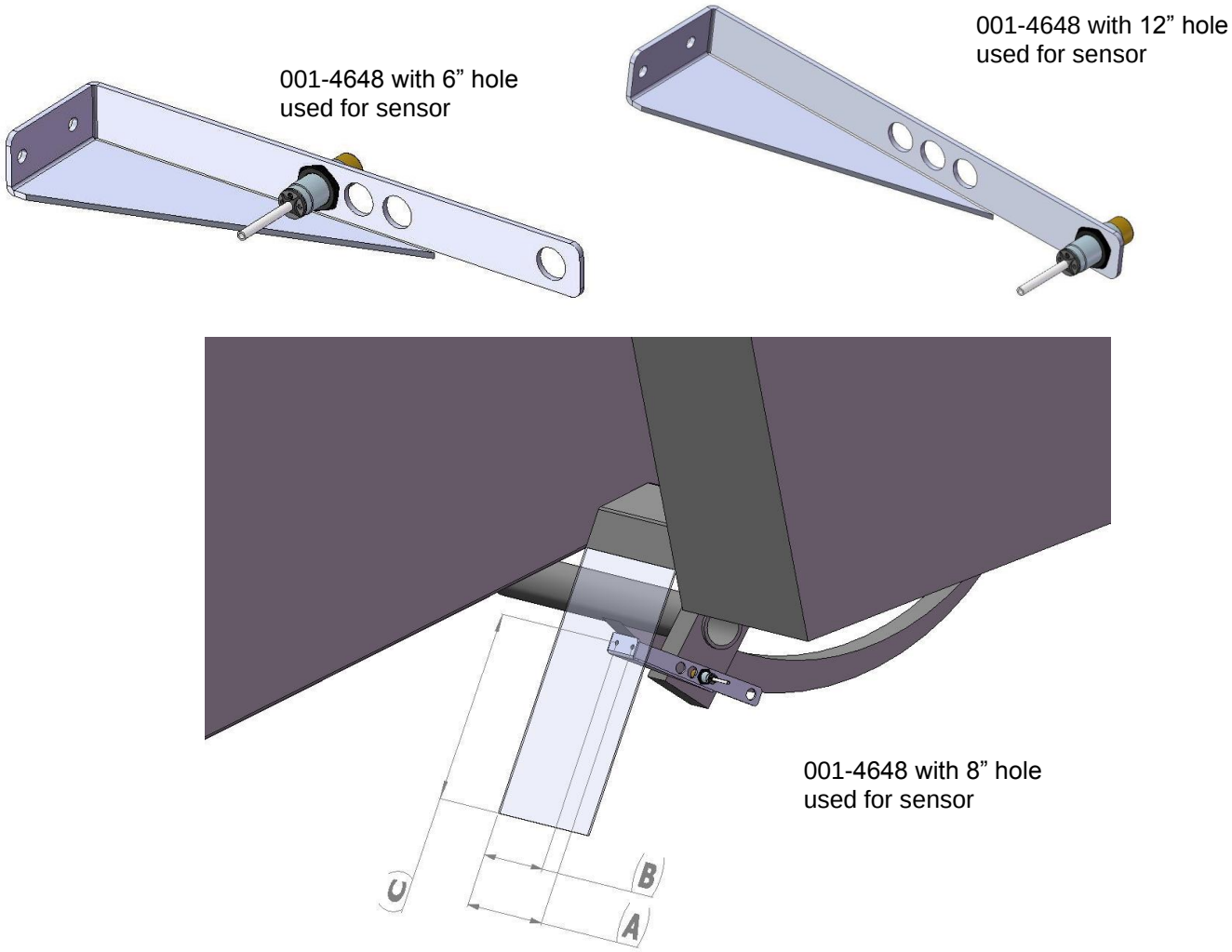

Sensor hole location	A	B	C
8”	4-7/8”	3-1/8”	15”

Mount the end of bale sensor bracket (001-4648) as shown in the 8” hole position. Mark and drill two 3/8” holes and attach the bracket using two 5/16” x 1” self-tapping screws, and 5/16” flange nuts. Mount the sensor in the 8” hole location, keep the sensor ¼” from the needle arm and tighten both nuts. Cut off excess metal past the sensor. Run the sensor cable up to the Dual channel Processor (DCP) and secure to the baler.

5. Installation of the Drain & Fill Line

A. Locate parts bag 1.
B. Thread ¾” elbow fitting into end of tank.
C. Run hose from the elbow down the frame to the bottom of the baler.
D. Drill ¼” holes to accept the valve holder bracket and use 5/16” x 1” self-tapping screws.
E. Connect valve assembly to other end of hose. Place hose clamps on both ends.
F. Secure hose to frame using cable locks.
G. Install supplied safety decals (DCL-8001 & DCL-8005) next to the ball valve assembly.

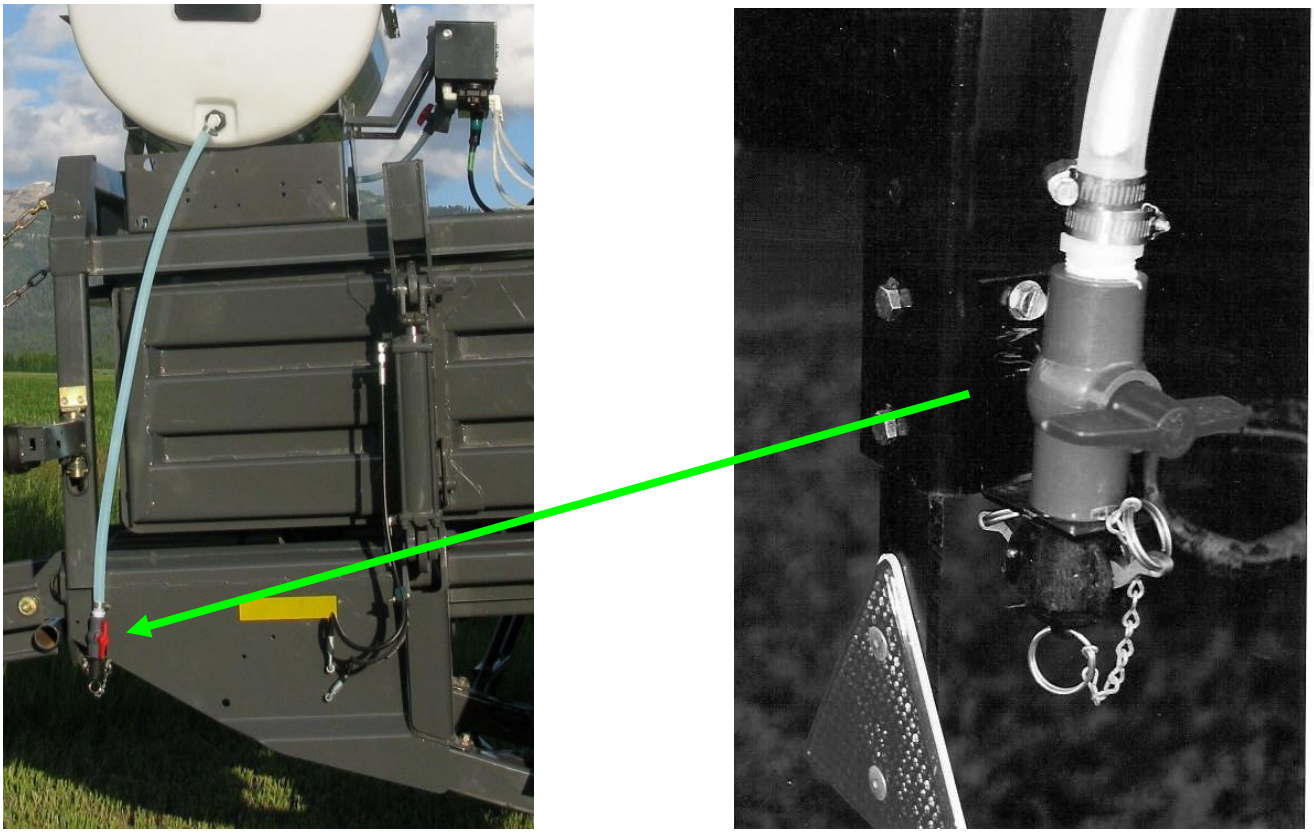

6. Installation of Spray Shield

The spray shield assembly is designed to spray the hay evenly as the baler picks it up. Sketches of the spray shield nozzle holders are shown below.

Installation of Spray Shield Kit 4518B

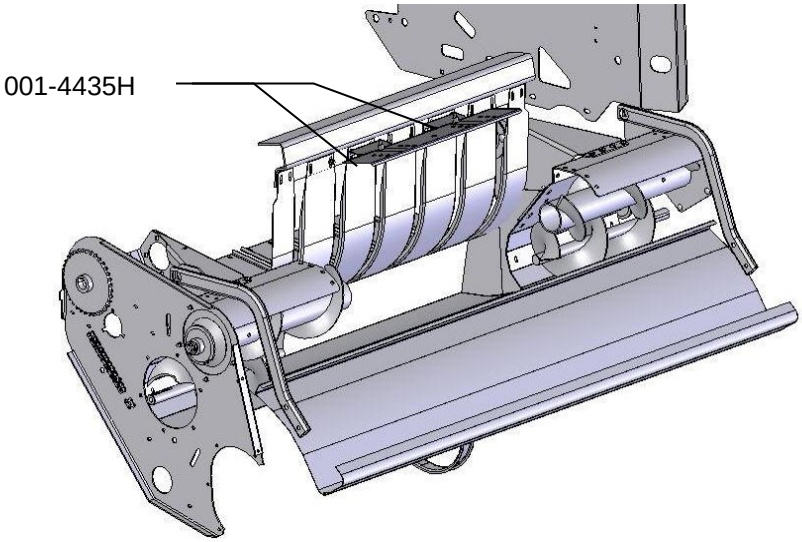

Remove the four bolts attached to the wrapper stripper plates as shown above. Replace with the four supplied 3/8” x 1-1/4” carriage bolts, nuts, locks, and flat washers. Mount the spray shield holders (001-4435H) and loosely tighten down hardware. Install spray shield and secure with the two supplied lynch pins. Tighten all hardware. Use the inside slots on 3x3 balers and the outside slots on 3x4 and 4x4 balers.

Installation of Spray Shield Kit 4519B

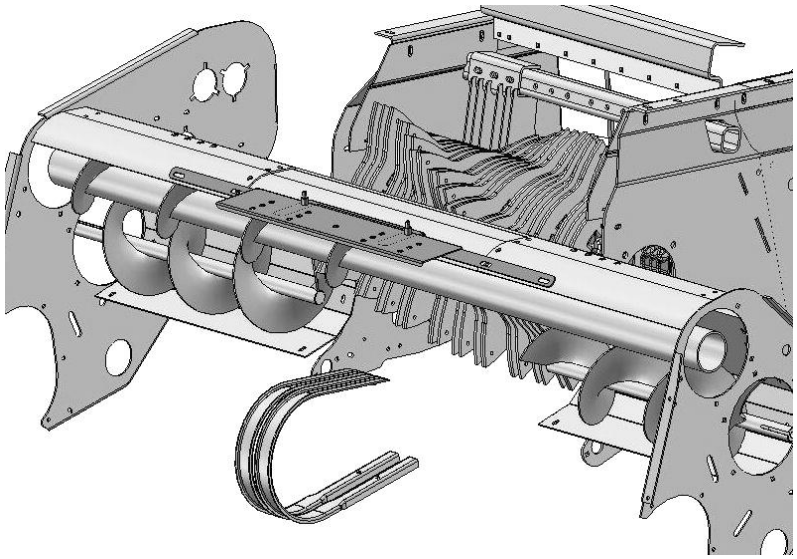

Locate bottom hole on each side of center insert over top auger and bolt spray shield and mounting bracket into place using the 3/8” x 1-1/4” carriage bolts, nuts, locks, and flat washers. Use the inside slots on 3x3 balers and the outside slots on 3x4 and 4x4 balers.

Installation of Spray Shield Kit 4527B

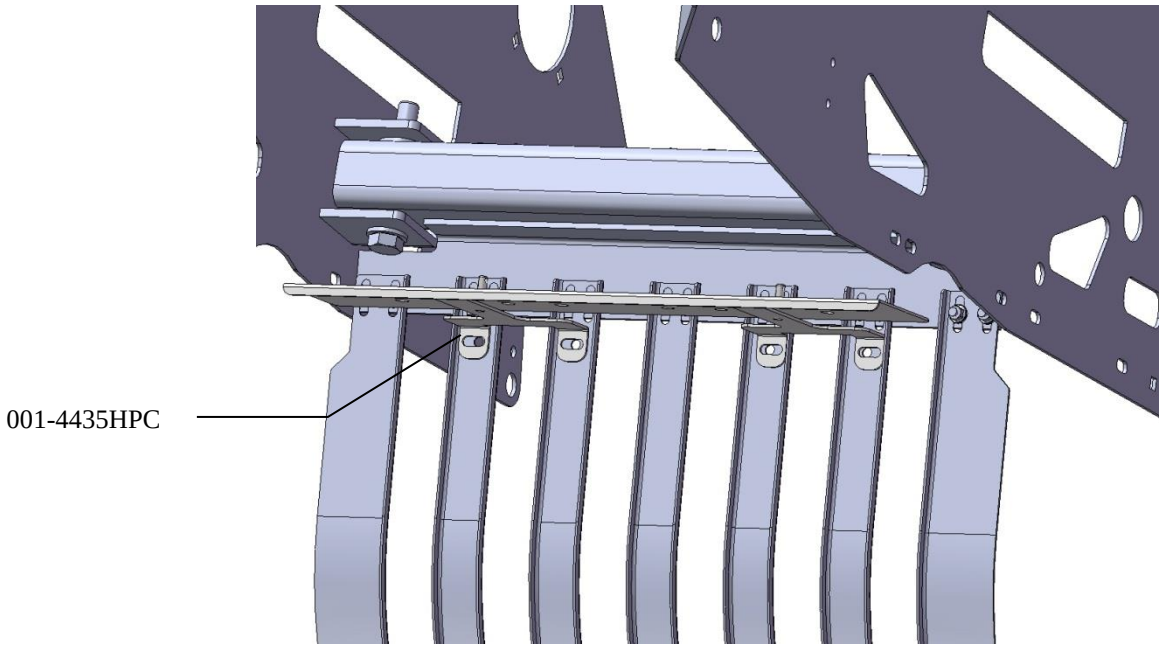

Mount the two spray shield mounting brackets (001-4435HPC) to the baler as shown above. Attach using four 3/8” x 1-1/4” bolts, flats, locks, and nuts. Mount the spray shield (001-4435ES) on top of the mounting brackets and secure with two lynch pins. Use the inside slots on 3x3 balers and the outside slots on 3x4 and 4x4 balers.

Installation of Spray Shield Kit 4530B

Locate the two bolts shown in figure A directly below the baler’s flywheel. Connect the two mounting brackets (001-4435XB) to figure A using the existing hardware. Connect the mounting brackets to the shield holder (001-4435XA) using four 3/8” x 1” hex bolts, lock washers, and hex nuts. Install the spray shield assembly (001-4435AS) and secure with two supplied lynch pins.

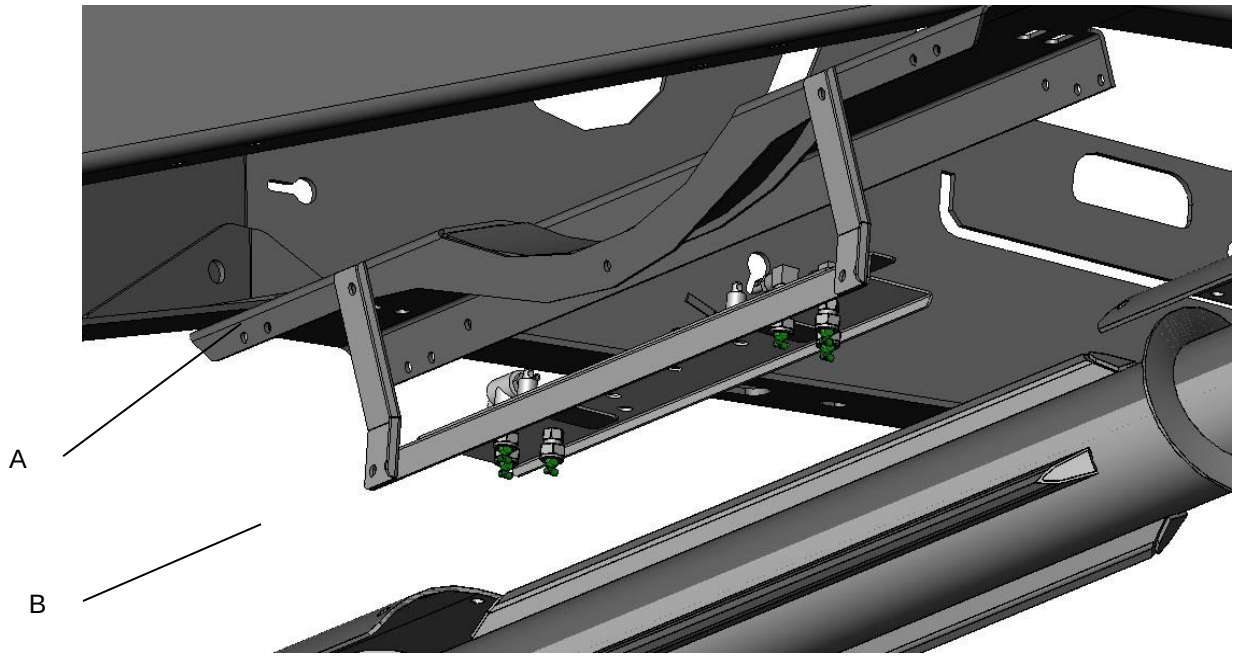

Installation of Spray Shield Kit 4542B

Locate the baler cross support bar below the baler's flywheel. Connect the mounting bracket (001-4435NAX) as shown in figure A. Connect the mounting bracket to baler using two 3/8" x 1 1/4" hex bolts, lock washers, and hex nuts. Install the spray shield assembly (001-4435NSX) as shown in figure B and secure with supplied lynch pins.

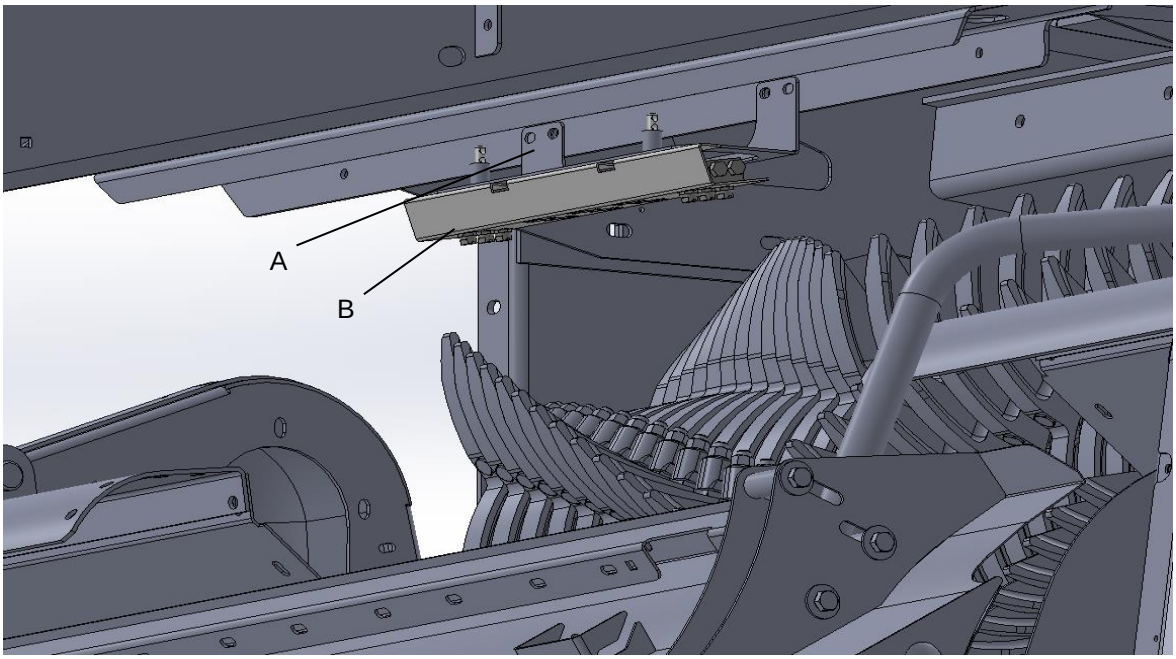

7. Plumbing

A. Locate the three ¼" hoses colored clear, blue, and green. The pumps will need to be connected to specific tips so the pump numbers are as follows: Pump 1 is closest to the filter bowl, pump 2 is in the middle, and pump 3 is the outside pump.
B. Slide the jaco nut over the end the hose and insert the hose into the jaco fitting and tighten the jaco nut. Because all nozzles on the spray shield are different, the operator will need to install pump 1 to the orange tips using the clear hose, pump 2 to the green tips using the green hose and pump 3 to the blue tips using the blue hose.
C. **KEEP HOSE AWAY FROM: MOVING PARTS, SHARP METAL, AND HYDRAULIC LINES. WORKING TEMPERATURE FOR THE HOSE IS 140 ºF AND UNDER.**
D. Tie the hose down at secure locations on the baler using the enclosed tie straps and cable clamps.

High and Low Output Tips

Your baler comes with two sets of tips: a high set and a low set. **The High set comes factory installed.**

-The High set will cover outputs of 84 to 632 lbs/hr (Approx. 21-63 tons/hr) Install these tips:

Clear hose to orange tips (004-TT11001VP)
Green hose to green tips. (004-TT110015VP)
Blue hose to blue tips. (004-TT11003VP)

-**The Low set will cover outputs of 44 to 400 lbs/hr (Approx. 11-40 tons/hr) Install these tips:**

Clear hose olive green tips. (004-800067PT)
Green hose to orange tips. (004-TT11001VP)
Blue hose to olive green tips. (004-TT110015VP)

If you switch tips be sure to change the tip output setting (in the software through the display) under Application Rate. Instructions to change the application rate are in the Operator's Manual under "Application Rate: Selecting High or Low tips."

8. Installation of Star Wheel and Bale Rate Harness

First, remove the cover from the star wheel block and use a ¼" nut driver to remove the nut from the electronic swivel. Next, run the star wheel sensor wire through the black grommet and place the eye terminal on the star wheel sensor. Tighten the eye loop with the nut on the sensor and put the star wheel cover back on the base. Next, tighten the grommet to form a tight seal around the wire. The bale rate sensors will be factory installed on the right side twine guard in the correct position. The sensor with the longer sensor wire should say "FRONT", which indicates it should be placed in the front sensor hole. The sensor wire with the shorter wire should say "BACK." The tip of the sensor should be placed no more than ¼" away from the star wheel teeth and no less than 1/8" from the star wheel teeth. Each sensor will have an LED light located on the sensor by the diverter. Once the unit is powered up spin the wheel and make sure that both led lights turn on and off. If they don't turn on and off, adjustments may need to be made.
Once the star wheel connection is complete, run the harness along the baler frame to the Dual Channel Processor (DCP). (See wiring installation on the following page.) The Dual Channel Processor is located on the back of the right twine box.

9. Main Wire Harness and Baler Interface Harness Routing and Connections

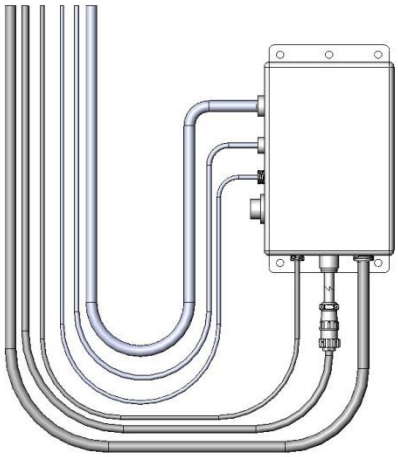

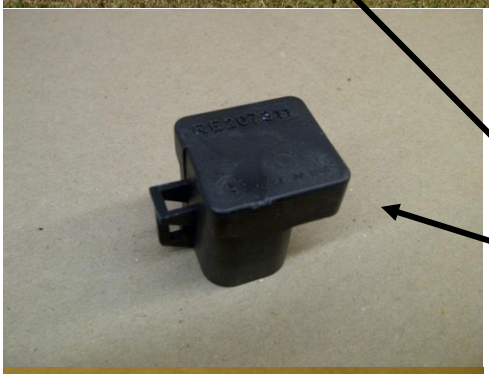

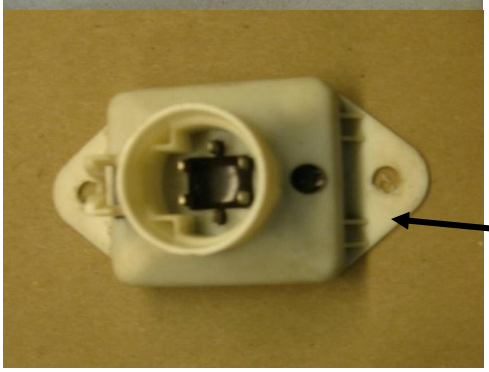

A. Route harness 006-6650LS2 along this path or similar inside of the baler. Keep harnesses away from moving parts and hydraulic hoses. Secure with existing cable clamps or use cable ties. When all connections are made to the DCP secure wires as shown above to allow for water to be shed away from the DCP.

B. Under the chamber locate the Active Terminator from the end of the baler harness. It is located at the right rear corner of the baler frame. Attach Baler Interface Harness (006-6650VA) to that location. Reconnect Active Terminator to open port of that same harness (006-6650VA). If your baler does not have a Terminator at this location please call Harvest Tec INC.

If your baler has the White Terminating Resistor you will need to attach the Pre 2012 AGCO Integration Harness (006-6650VAX) to the end of the Baler Interface harness (006-6650VA). Please contact Harvest Tec for this harness. This style terminator may be next to the Baler's Main Processor.

10. Baler Harness/Wiring Installation for AGCO with Baler Interface

A. The **Baler Power/Communication Harness** (006-6650LS2) will attach to the open port of the Tractor **Harness** (006-6650TM) and run back to the Dual Channel Processor (DCP-006-6671LS). Connect the large plug of the Baler Power/Communication Harness (006-6650LS2) to the bottom (shorter side) of the DCP. Attach **Baler Interface Harness** (006-6650VA) in between the short whip cable hardwired to the DCP and the main Power/Communication Harness (006-6650LS2). Make sure Active Terminator removed from the back underside of the baler is attached to the Baler Interface Harness (006-6650VA).
B. Install terminating resistor (006-5650Z) to port labeled **Modular Port** on Pump Controller (006-5672).
C. Attach moisture and bale rate harness (006-7303H) and end of bale harness (006-7400) to the DCP.
D. Attach the Pump Control Harness (006-5650FM) between the Pump Controller (006-5672) and the DCP (006-6671LS). Connect Keyed Power Extension harness (006-5650K) to a keyed power source.
   a. When using Bluetooth Receiver (030-6672A) or optional Touch Screen Display (030-5670A). Connect either option to Communication Harness (006-6650TM) in place of the ISO adapter (shown below) and connect the keyed power wire to a keyed power source on tractor.
E. Note: the Optional Port and the Data Transfer Port are not used in this application.

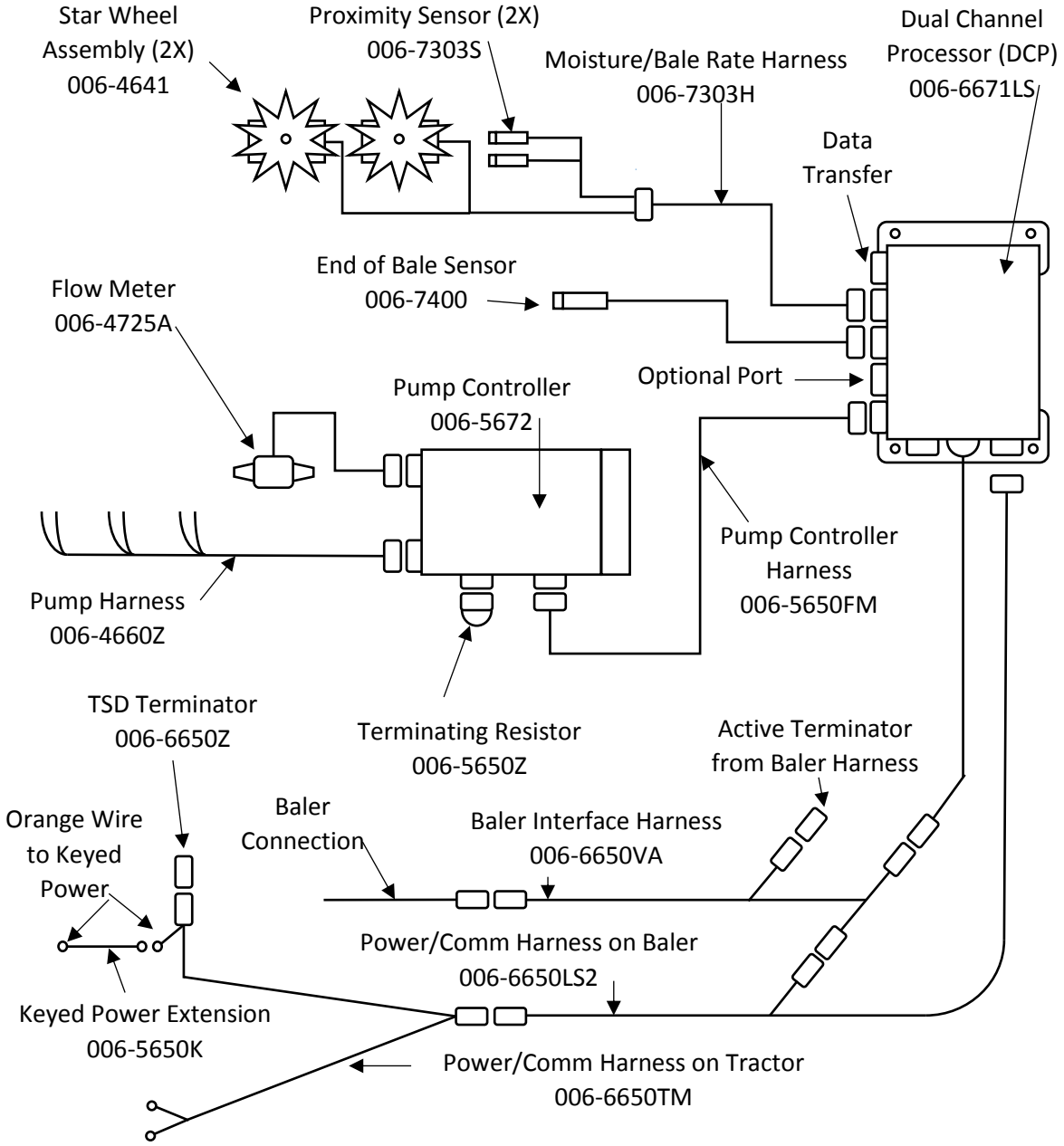

*AGCO 2100 Series Balers Pre 2012 will need the Integration Harness 006-6650VAX

Pin Outs for Harnesses and Wiring Diagrams

<u>Power/Comm Harness 006-6650TM at Hitch</u>

Pin 1	Red	+12V Power to TSD
Pin 2	Red	+12V Power to DCP
Pin 3	Orange	Keyed Power
Pin 4	Gray	Shield
Pin 5	Green	HT Can Low
Pin 6	Yellow	HT Can Hi
Pin 7	Orange	Can1 Hi
Pin 8	Black	Ground from TSD
Pin 9	Black	Ground from DCP
Pin 10	Blue	Can1 Low

<u>Power/Comm Harness 006-6650LS2 at Hitch</u>

Pin 1	Red	+12V Power to TSD
Pin 2	Red	+12V Power to DCP
Pin 3	Orange	Keyed Power
Pin 4	Gray	Shield
Pin 5	Green	HT Can Low
Pin 6	Yellow	HT Can Hi
Pin 7	Orange	Can1 Hi
Pin 8	Black	Ground from TSD
Pin 9	Black	Ground from DCP
Pin 10	Blue	Can1 Low

<u>Display Plug or Bluetooth Receiver on Harness 006-6650TM</u>

Pin 1	Red	+12V Power from DCP
Pin 2	Black	Ground from TSD
Pin 3	Yellow	HT Can Low
Pin 4	Gray	Shield
Pin 5	Green	HT Can Hi
Pin 6	Orange	Can1 Hi
Pin 7	Blue	Can1 Low

<u>006-6650VA to DCP Whip</u>

Pin 1	Red	Can Power
Pin 2	Black	Can Ground
Pin 3	Yellow	HT Can Hi
Pin 4	Gray	Shield
Pin 5	Green	HT Can Low
Pin 6	Orange	Can1 Hi
Pin 7	Blue	Can1 Low

For AGCO part cross-reference visit: www.harvesttec.com/system.html

006-6650VA to 006-6650LS2

Pin 1	Red	Can Power
Pin 2	Black	Can Ground
Pin 3	Yellow	HT Can Hi
Pin 4	Gray	Shield
Pin 5	Green	HT Can Low
Pin 6	N/A	
Pin 7	N/A	

006-6650VA Harness to Baler Plug

Pin A	N/A	
Pin B	Red	TBC Power
Pin C	N/A	
Pin D	Gray	TBC Ground
Pin E	Orange	Can1 Hi
Pin F	Blue	Can1 Low

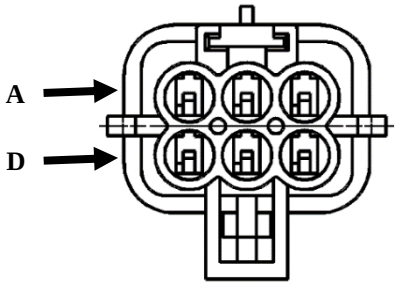

Main Power Connector on Dual Channel Processor (DCP)

Pin 1	Red	+12V Power from tractor
Pin 2	Black	Ground from tractor
Pin 3	Orange	Keyed power

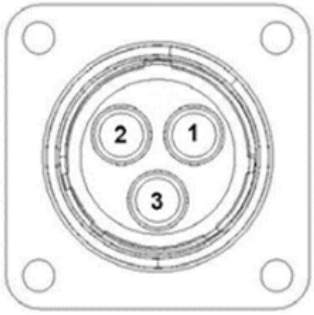

Star Wheel and Bale Rate Sensor connector on DCP

Pin 1	Blue	+12V Power
Pin 2	Orange	Ground
Pin 3	Black	Signal for sensor 1
Pin 4	White	Signal for sensor 2
Pin 5	N/A	
Pin 6	N/A	
Pin 7	N/A	
Pin 8	Violet	Star wheel input 1
Pin 9	Brown	Star wheel input 2

End of Bale sensor on DCP

Pin 1	Brown	Sensor Power
Pin 2	Blue	Sensor Ground
Pin 3	N/A	
Pin 4	Black	Signal from Sensor

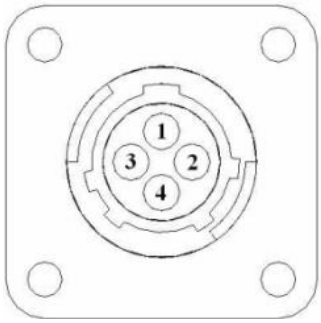

Pump Communication Plug on DCP

Pin 1	Red	+12V Can
Pin 2	Red	+12V Power
Pin 3	Gray	Shield
Pin 4	Green	Comm Channel OH
Pin 5	Yellow	Comm Channel OL
Pin 6	Blue	Comm Channel IH
Pin 7	Orange	Comm Channel IL
Pin 8	Black	Can Ground
Pin 9	Black	Power Ground
Pin 10	N/A	

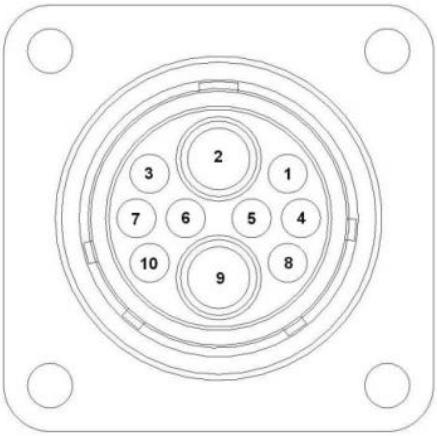

Pump Connection Colors

Pin 1	Black with Orange Stripe	Pump 1 Ground
Pin 2	Black with Green Stripe	Pump 2 Ground
Pin 3	Black with Yellow Stripe Shield	Pump3 Ground
Pin 4	N/A	
Pin 5	Orange with Black Stripe	Pump 1 Positive
Pin 6	Green with Black Stripe	Pump 2 Positive
Pin 7	Yellow with Black Stripe	Pump 3 Positive

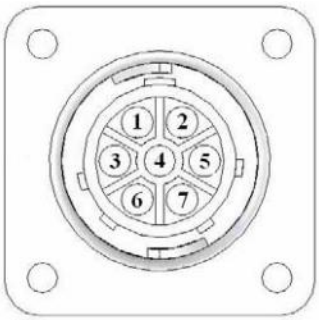

Flow Meter Connection on Pump Controller

Pin 1	White	+5-12V Power
Pin 2	Green	Ground
Pin 3	Brown	Signal
Pin 4	Black	Shield

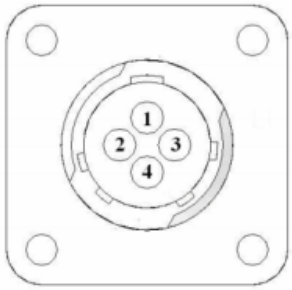

Connector for Crop Eyes on DCP

Pin 1	Red	+12V Power
Pin 2	Black	Ground
Pin 3	White	Signal
Pin 4	N/A	

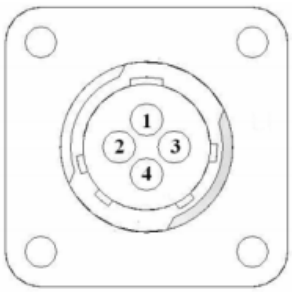

Parts Breakdown
Tank, Saddle and Legs 110 Gallon

Tank Lid
Part#:005-9022E

Tank-110 gallon
Part# 005-9208

Hand Rail
Part# 001-6707HR

Tank Straps
Part#:001-4402B

Tank Saddle
Part#:001-6707A

Tank Fittings
Part#:005-9100

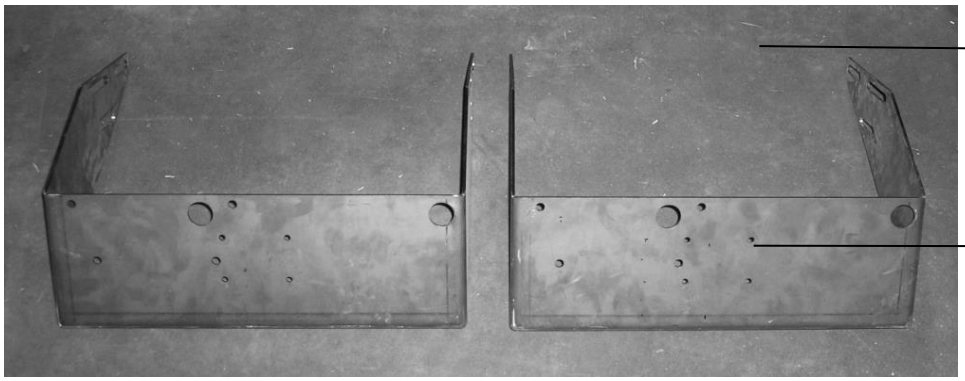

Legs for: AGCO, Hesston, Massey & Challenger

Saddle Legs
Part# 001-6707C

Parts Breakdown for Pump Manifold

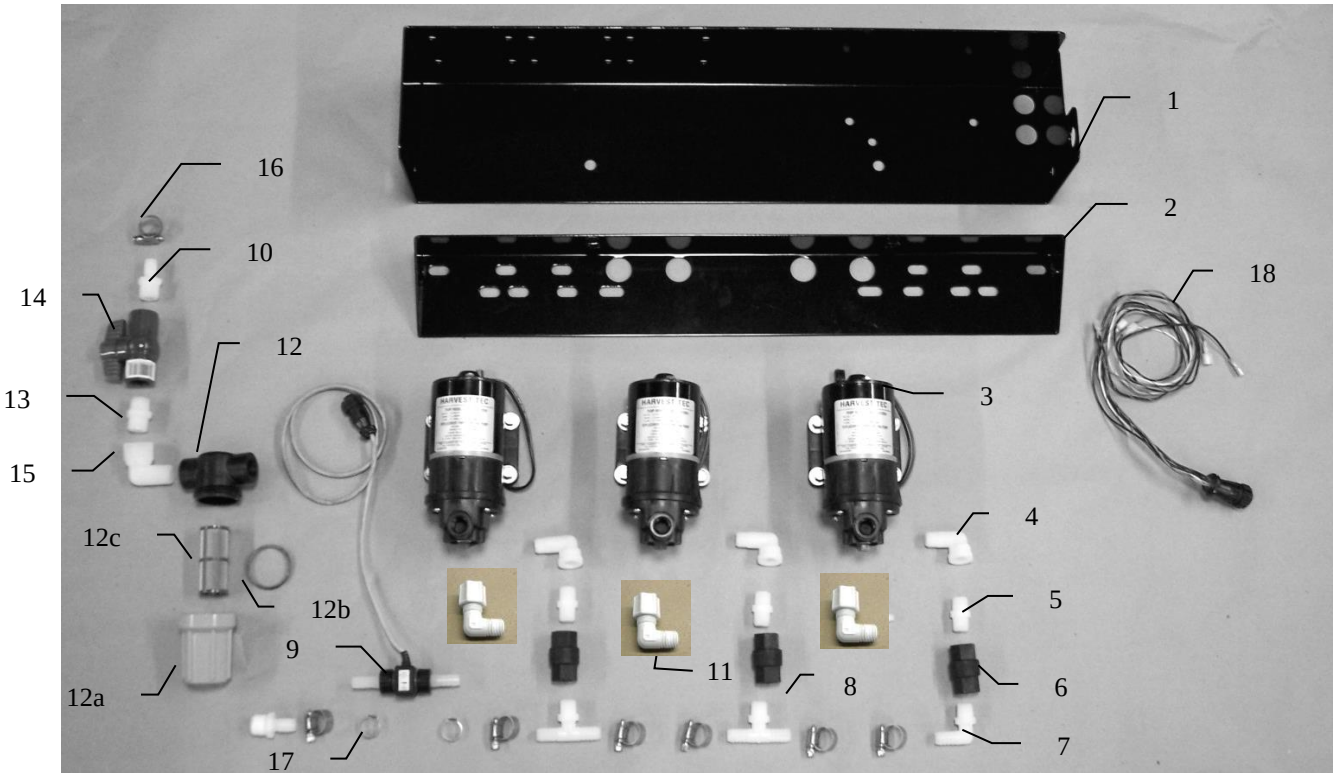

Ref#	Description	Part#	Qty
1	Pump plate	001-4646D	1
2	Mounting Bracket	001-4646C	1
3	Pump	007-4120H	3
4	Street elbow fitting	003-SE38	3
5	Nipple fitting	003-M3838	3
6	Check valve	002-4566F	3
7	Elbow fitting	003-EL3812	1
8	Tee fitting	003-T3812HB	2
9	Flow meter assembly	006-4725A	1
10	Straight fitting	003-A1212	2
11	Jaco fitting	003-JEL1238	3
12	Filter bowl assembly	002-4315-100	1
12a	Filter bowl only	002-4315F	1
12b	Filter bowl gasket	002-4315D	1
12c	Filter bowl screen	002-4315A	1
13	Nipple fitting	003-M1212	1
14	Ball valve	002-2212	1
15	Street elbow fitting	003-SE12	1
16	Hose clamp	003-9003	7
17	Hose clamp (Flow Meter)	003-9005	2
18	Pump Cable	006-4660Z	1
NP	Elbow	003-EL1212	1
NP	Pump rebuild kit (1 per pump)	007-4581	1
NP	Not Pictured		

Parts Breakdown for Star Wheel Moisture Sensors

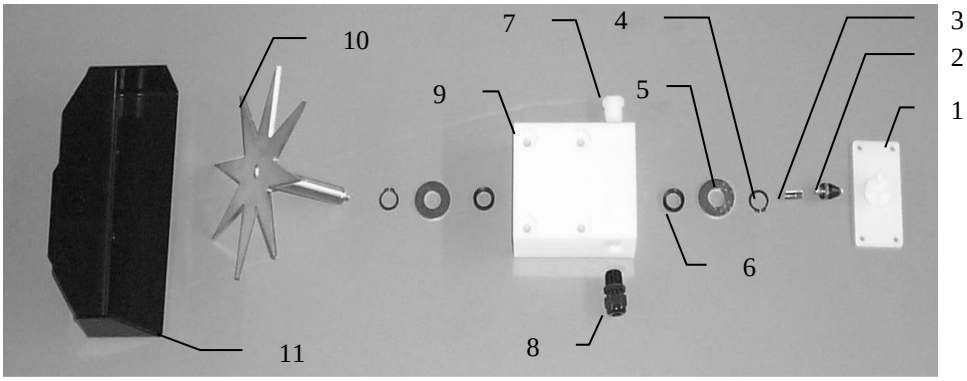

Ref	Description	Part#	Qty	Ref	Description	Part#	Qty
1	Block cover	006-4641B	2	9	Star wheel block	006-4641A	2
2	Electronic swivel	006-4642A	2	10	Star wheel sensor	030-4641C	2
3	Swivel insert	w/ Ref # 10	2	11	Twine guard-left for AGCO	001-4645H	1
4	Snap ring (per side)	006-4641K	2		Twine guard-right for AGCO	001-4644H	1
5	Washer (per side)	w/006-4641K	2		And with bale rate sensor		
6	Dust seal (per side)	w/006-4641K	2		holes in it		
7	Plug fitting	003-F38	2	1-10	Star wheel assembly	030-4641	2
8	Wiring grommet	008-0821A	2	NP	Star wheel spacer	001-6707E	2

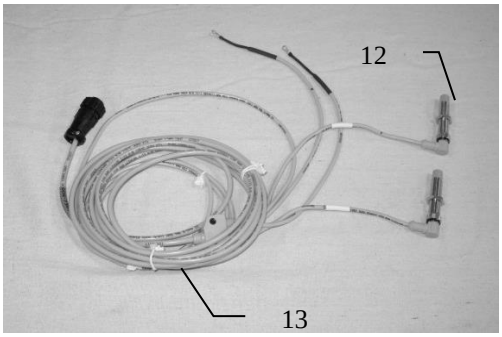

Ref	Description	Part#	Qty
12	Bale rate sensor	006-7303S	2
13	Moisture and bale rate harness	006-7303H	1

Parts Breakdown for 600 Series Control Boxes and Harnesses

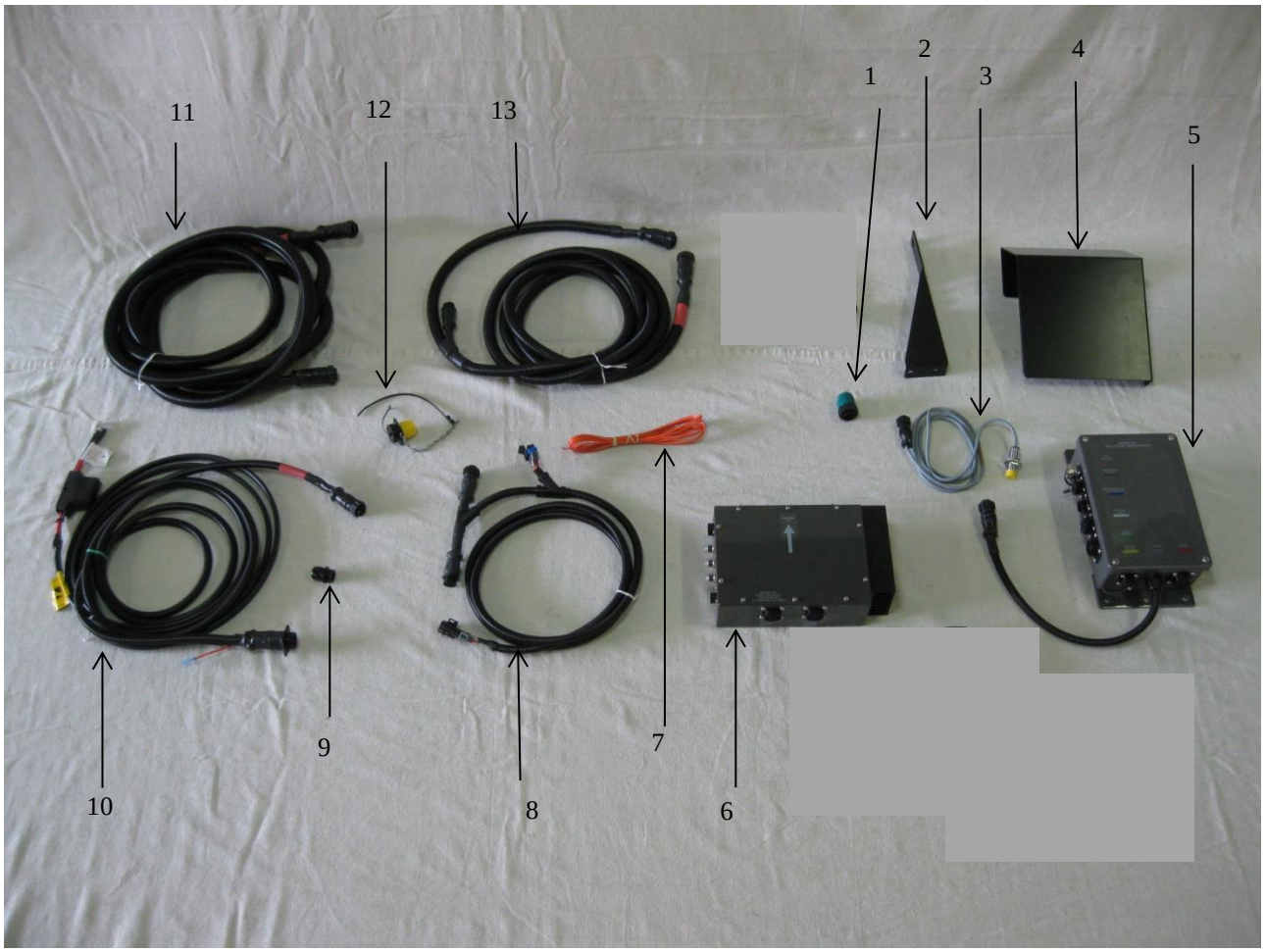

Ref	Description	Part Number	Qty
1	Terminating Resistor Series	006-5650Z	1
2	End of Bale Sensor Bracket	001-4648	1
3	End of Bale Sensor Series	006-7400	1
4	DCP Shield/Cover	001-5650X	1
5	DCP Main Control LS 600 AUTO	006-6671LS	1
6	Pump Controller	006-5672	1
7	Key Switch Wire	006-5650K	1
8	DCP Baler Interface Harness	006-6650VA	1
9	DCP TSD Terminator	006-6650Z	1
10	DCP Tractor Harness	006-6650TM	1
11	Modular Power/Comm 10 FT Harness	006-5650FM	1
12	Dust Plugs	006-5651PLUGS	1
13	DCP Baler Harness 30 FT	006-6650LS2	1
	AGCO 2100 Series Baler-Pre 2012 will need	006-6650VAX	

For AGCO part cross-reference visit: www.harvesttec.com/system.html

Parts Breakdown for Hose and Drain Fill Line

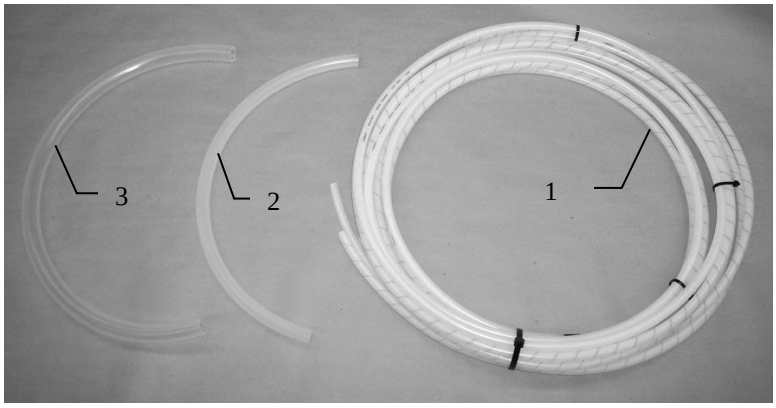

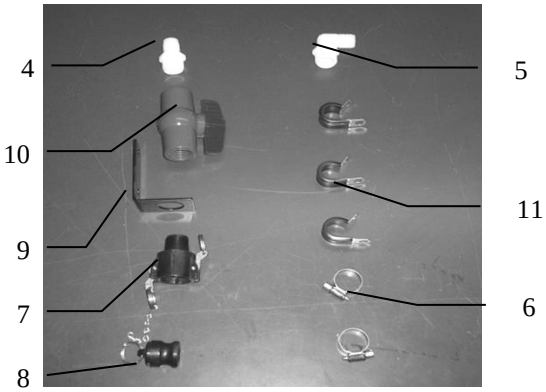

Ref	Description	Part#	Qty	Ref	Description	Part#	Qty
1	Triple weld hose (from pumps to tips)	002-9016	35ft	7	Female Coupler	002-2204A	1
		002-9016B	35ft				
		002-9016G	35ft				
	Three hose assembly	030-9016LS	1				
2	½” Hose (tank to filter)	002-9001	6ft	8	Male Coupler	002-2205G	1
3	¾” Hose (tank to drain/fill valve)	002-9002	10ft	9	Valve Holder	001-6702H	1
4	Straight Fitting	003-A3434	1	10	Ball valve	002-2200	1
5	Elbow	003-EL3434	1	11	Jiffy Clip	008-9010	3
6	Hose Clamps	003-9004	2				

Optional Touch Screen Display (TSD)

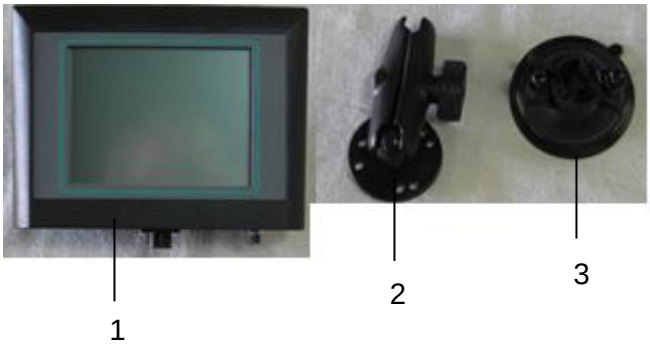

Ref	Description	Part #
1	Touch Screen Display	006-6670
2	Ram Mount	001-2012H
3	Suction Cup Mount	001-2012SCM
Complete Kit		030-5670A

Optional Bluetooth Receiver

Part #: 030-4672A

Installation Kits Specific to Balers

4518B Installation Kit

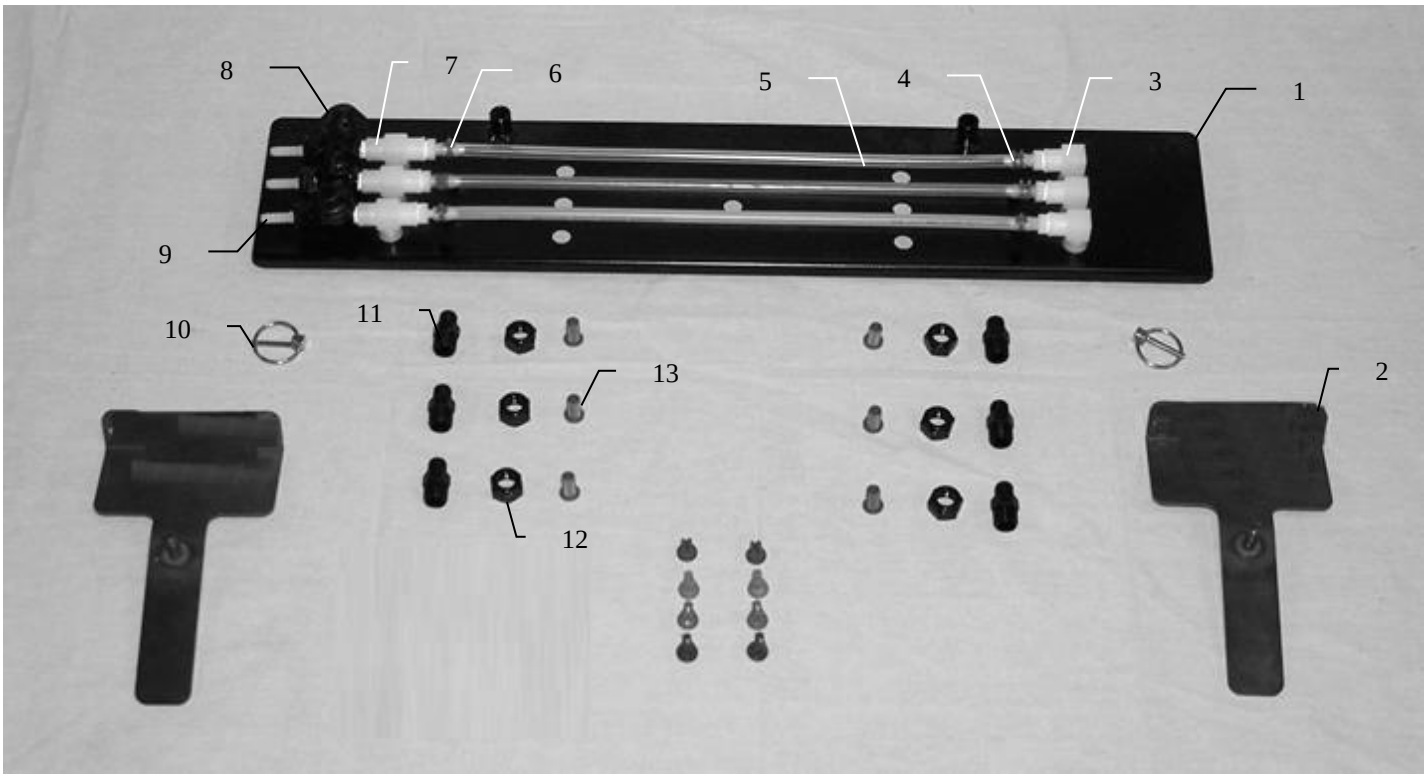

Ref	Description	Part #	Qty	Description	Part #	Qty
1	Spray shield	001-4435ES	1	Tip-Olive Green	004-800067-PT	2
2	Shield holder	001-4435H	2	Tip-Orange	004-TT11001VP	2
3	Elbow	003-SE14F	3	Tip-Green	004-TT110015VP	2
4	Straight fitting	003-A1414	6	Tip-Blue	004-TT11003VP	2
5	Hose	002-9016	6			
6	Hose clamp	003-9002	9			
7	Tee	003-TT14SQ	3			
8	Check valve	004-1207VB	3			
9	Straight fitting	003-A1414VB	3			
10	Lynch pin	008-4576	2			
11	Nozzle body	004-4722	6			
12	Nozzle cap	004-4723	9			
13	Tip strainer	004-1203-100	6			

For AGCO part cross-reference visit: www.harvesttec.com/system.html

4519B Installation Kit

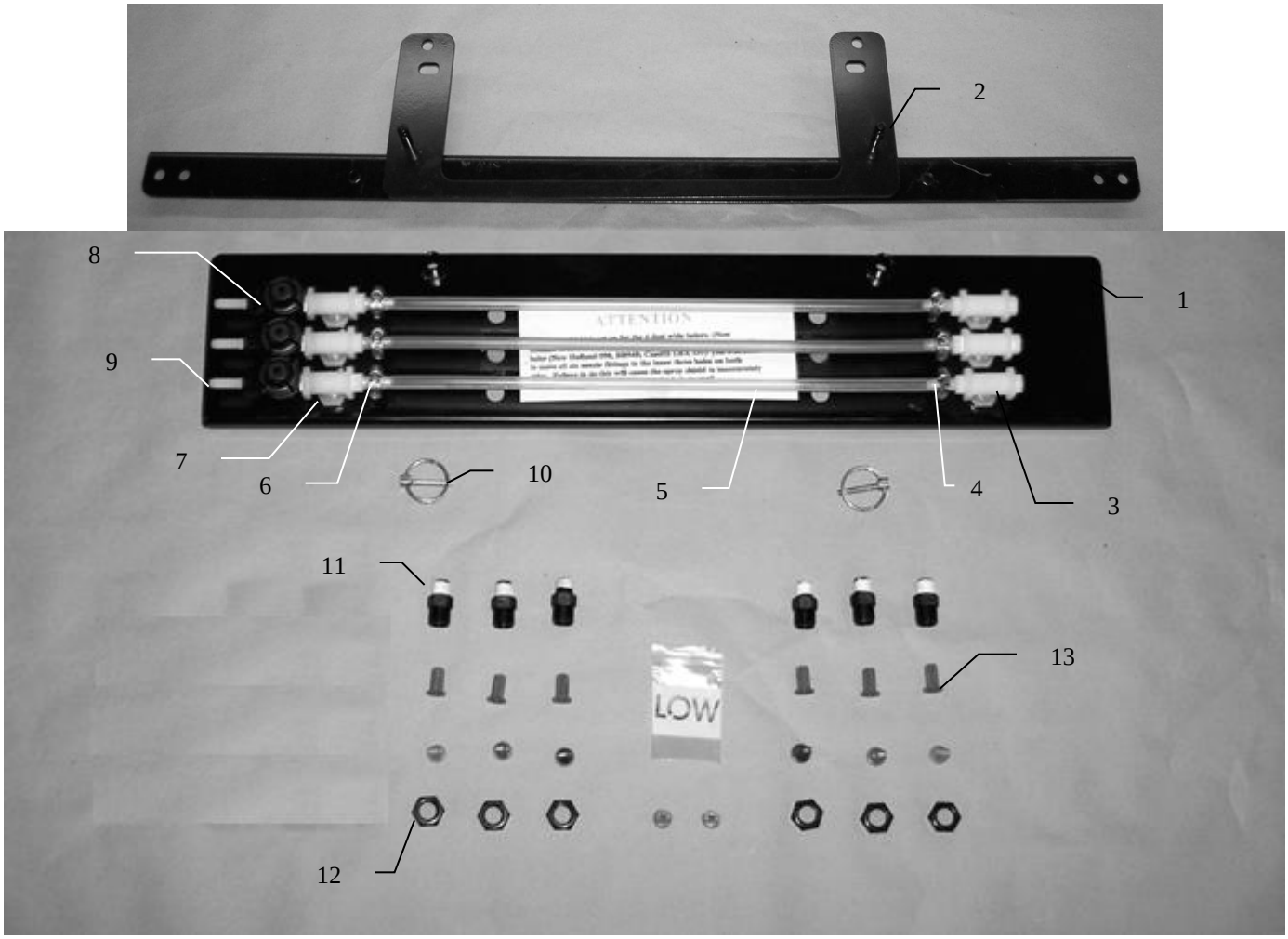

Ref	Description	Part #	Qty	Description	Part #	Qty
1	Spray shield	001-4435AS	1	Tip-Olive Green	004-800067-PT	2
2	Shield holder	001-4435J	1	Tip-Orange	004-TT11001VP	2
3	Elbow	003-SE14F	3	Tip-Green	004-TT110015VP	2
4	Straight fitting	003-A1414	6	Tip-Blue	004-TT11003VP	2
5	Hose	002-9016	6			
6	Hose clamp	003-9002	9			
7	Tee	003-TT14SQ	3			
8	Check valve	004-1207VB	3			
9	Straight fitting	003-A1414VB	3			
10	Lynch pin	008-4576	2			
11	Nozzle body	004-4722	6			
12	Nozzle cap	004-4723	9			
13	Tip strainer	004-1203-100	6			

For AGCO part cross-reference visit: www.harvesttec.com/system.html

4527B Installation Kit

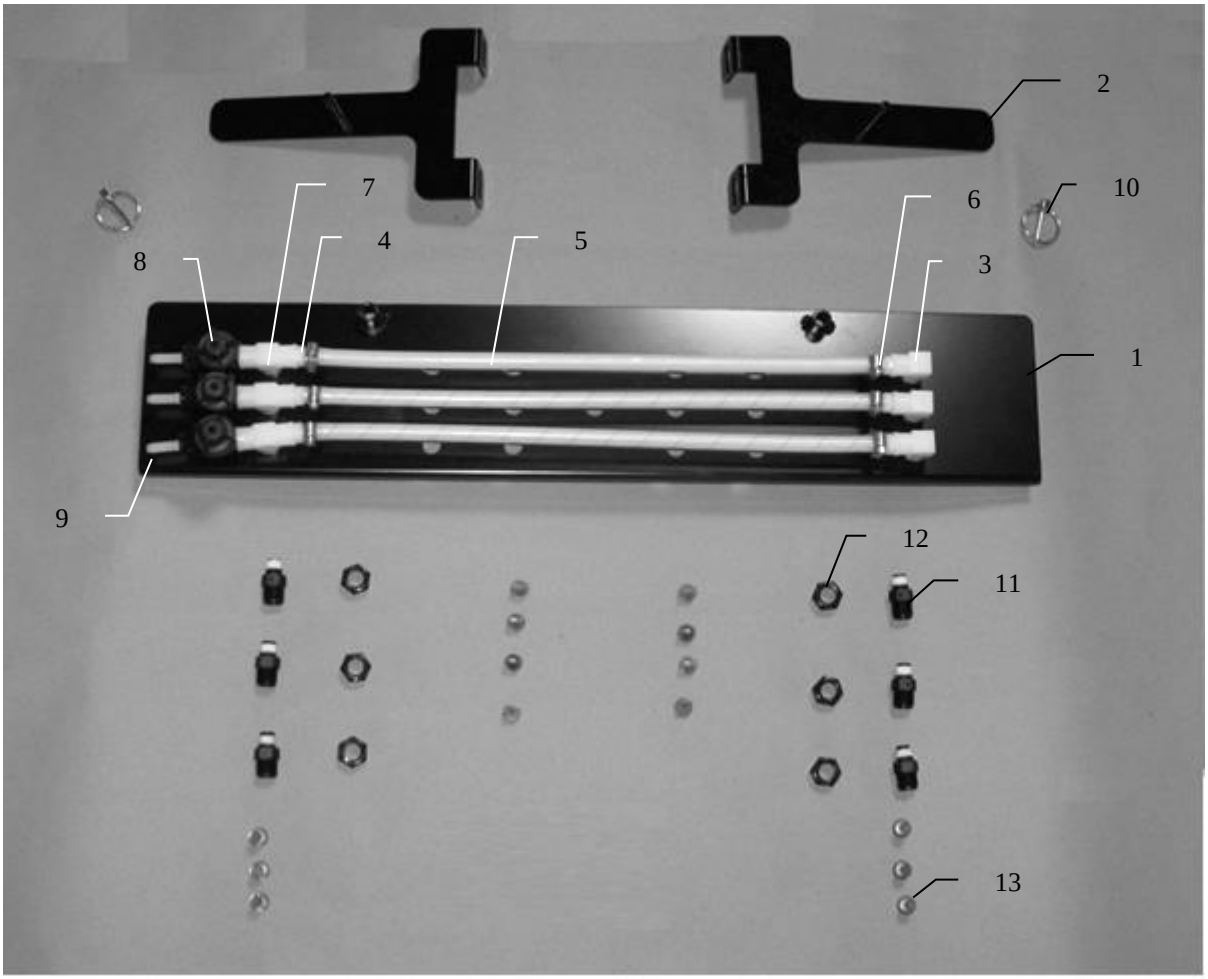

Ref	Description	Part #	Qty	Description	Part #	Qty
1	Spray shield	001-4435ES	1	Tip-Olive Green	004-800067-PT	2
2	Shield holder	001-4435HPC	2	Tip-Orange	004-TT11001VP	2
3	Elbow	003-SE14SQ	3	Tip-Green	004-TT110015VP	2
4	Straight fitting	003-A1414	6	Tip-Blue	004-TT11003VP	2
5	Hose	002-9016	6			
6	Hose clamp	003-9002	9			
7	Tee	003-TT14SQ	3			
8	Check valve	004-1207VB	3			
9	Straight fitting	003-A1414VB	3			
10	Lynch pin	008-4576	2			
11	Nozzle body	004-4722	6			
12	Nozzle cap	004-4723	9			
13	Tip strainer	004-1203-100	6			

For AGCO part cross-reference visit: www.harvesttec.com/system.html

4530B Installation Kit

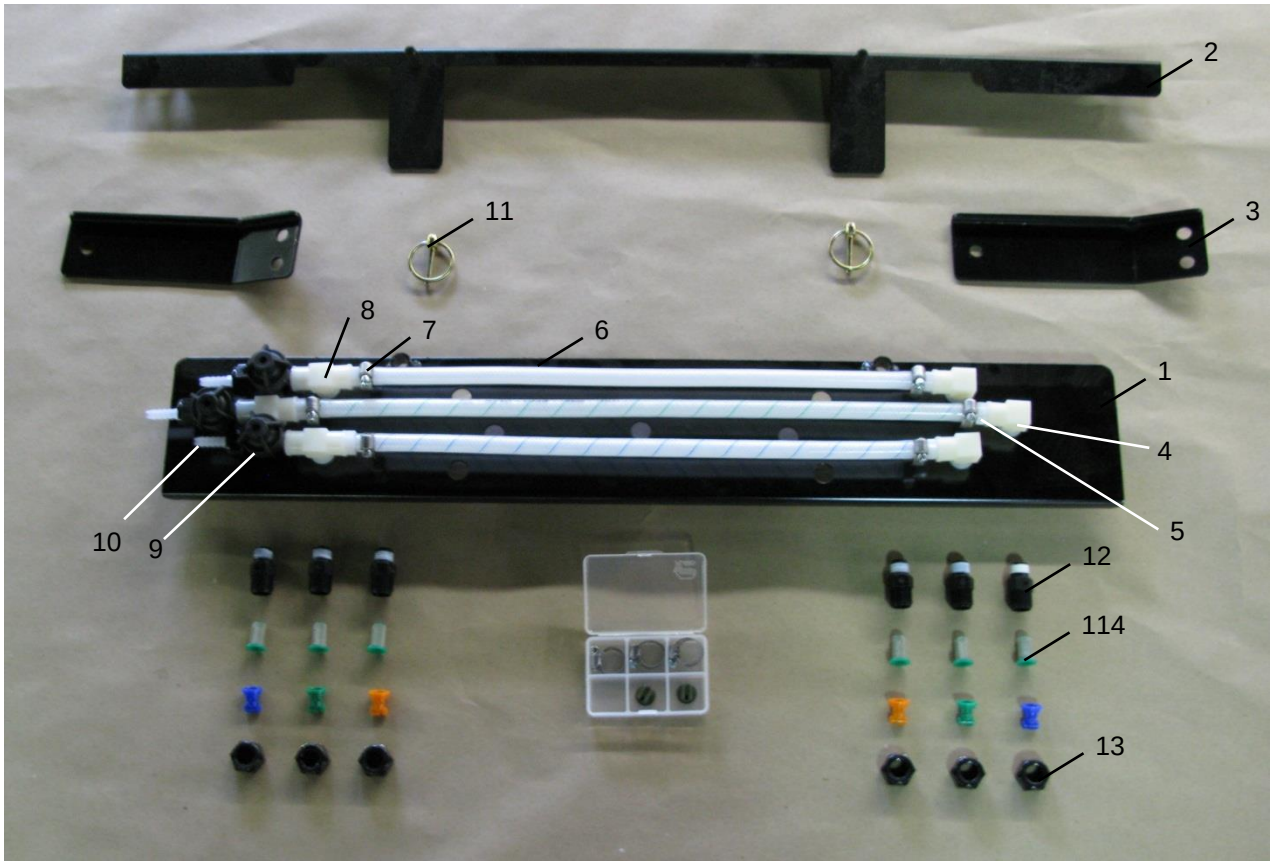

Ref	Description	Part #	Qty
1	Spray shield	001-4435AS	1
2	Shield holder	001-4435XA	1
3	Holder bracket	001-4435XB	2
4	Elbow	003-SE14SQ	3
5	Straight fitting	003-A1414	6
6	Hose	002-9016	6
7	Hose clamp	003-9002	9
8	Tee	003-TT14SQ	3
9	Check valve	004-1207VB	3
10	Straight fitting	003-A1414VB	3
11	Lynch pin	008-4576	2
12	Nozzle body	004-4722	6
13	Nozzle cap	004-4723	9
14	Tip strainer	004-1203-100	6
NP	Star wheel spacer	001-6707E	2
NP	Not pictured		

Description	Part #	Qty
Tip-Olive Green	004-800067-PT	2
Tip-Orange	004-TT11001VP	2
Tip-Green	004-TT110015VP	2
Tip-Blue	004-TT11003VP	2

For AGCO part cross-reference visit: www.harvesttec.com/system.html

4542B Installation Kit

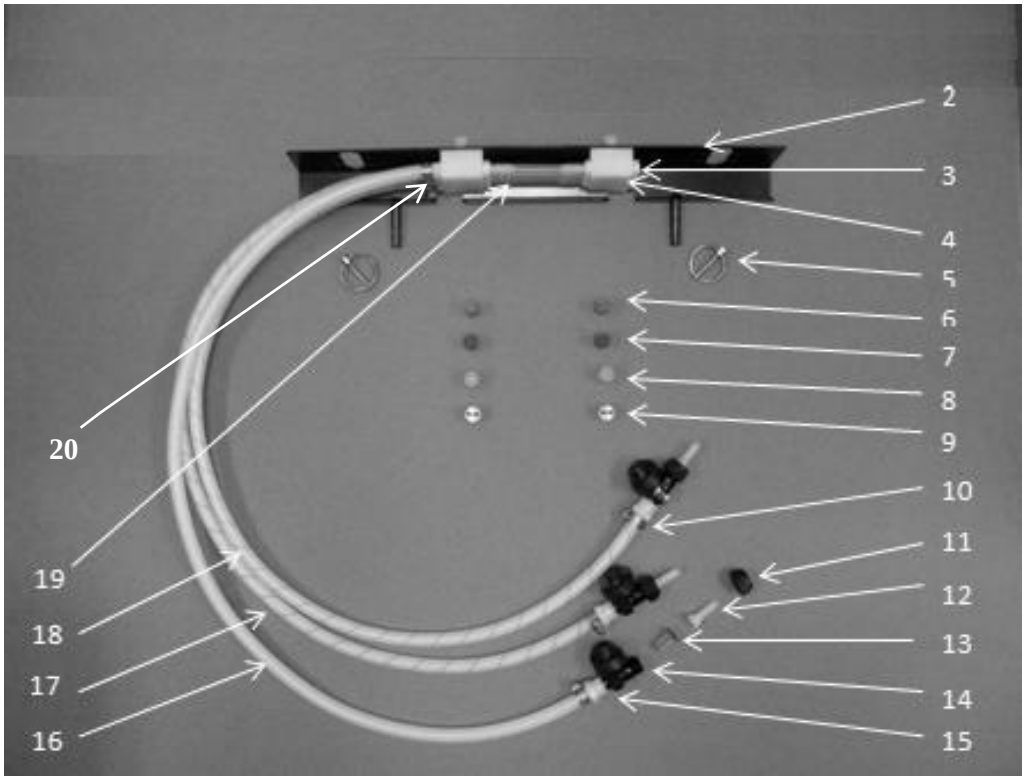

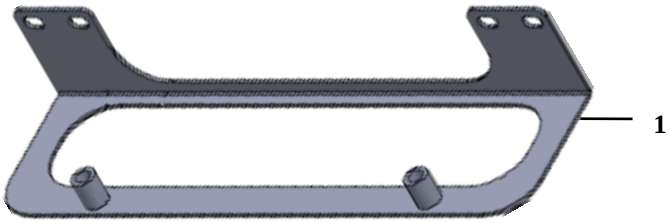

Ref	Description	Part Number	Qty	Ref	Description	Part Number	Qty
1	Holder	001-4435NAX	1	11	Cap	004-4723	3
2	Shield	001-4435NSX	1	12	Fitting	003-A1414VB	3
3	Fitting	003-F14	3	13	Strainer	004-1203-100	3
4	Manifold Block	001-4435NSB	2	14	Check Valve	004-1207VB	3
5	Lynch Pin	008-4576	2	15	Fitting	003-A1414F	3
6	Tip-Red	004-T8003-PT	2	16	Clear Tubing-1/4”	002-9016	3ft
7	Tip-Brown	004-T80015-PT	2	17	Blue Stripe Tubing	002-9016B	3ft
8	Tip-Pink	004-T8001-PT	2	18	Green Stripe Tubing	002-9016G	3ft
9	Tip-Stainless	004-T800067-SS	2	19	EVA-1/4”	002-9006	2ft
10	Hose Clamp	003-9002	15	20	Fitting	003-A1414	9
				NP	Mini Plano Box	008-9001	1
				NP	EOB Bracket	001-4648K	1

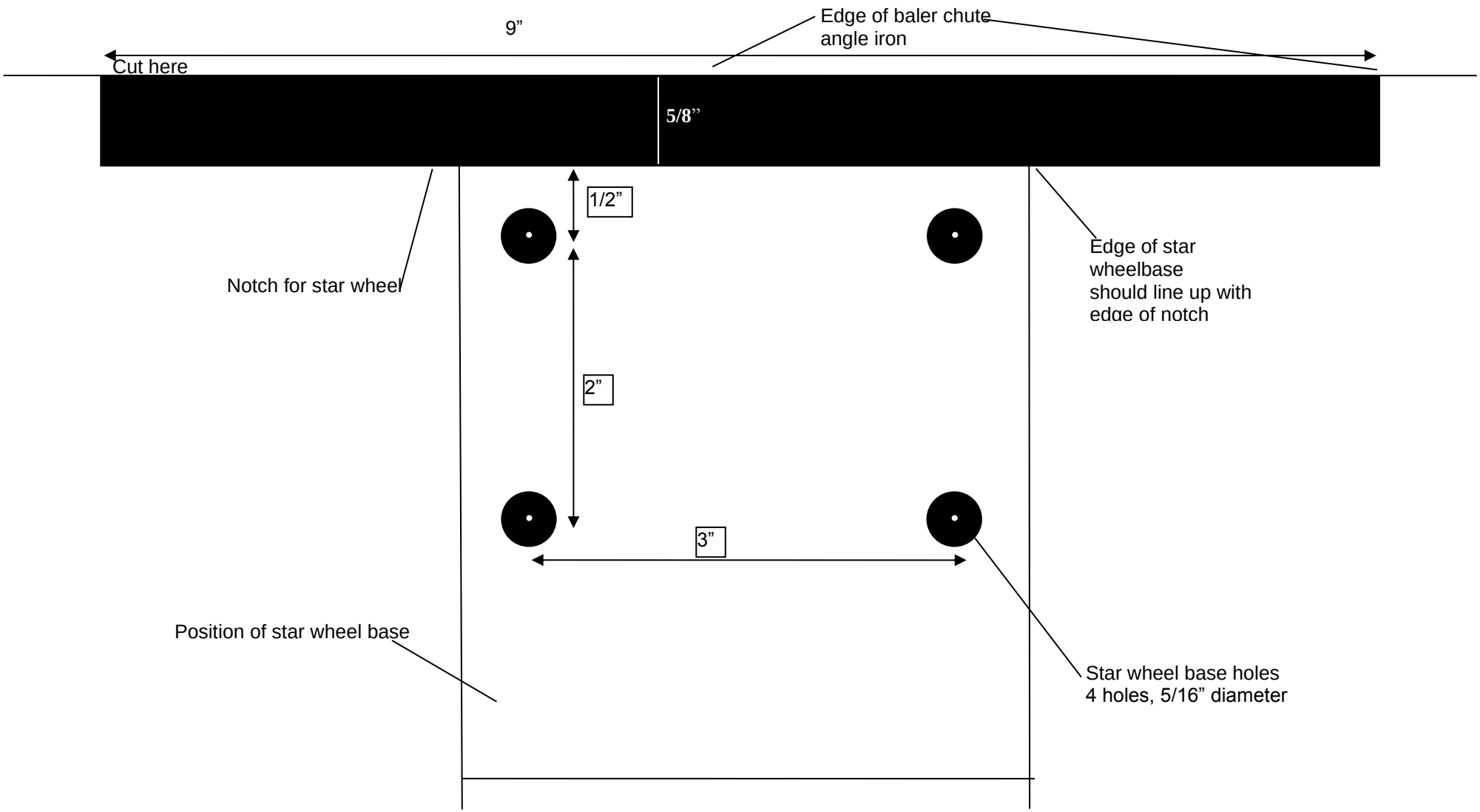

*This guide is to be used as a visual aid for star wheel installation. Exact measurements on baler are determined by operator

Notes:

Notes:

Harvest Tec, LLC. Warranty and Liability Agreement

Harvest Tec, LLC. will repair or replace components that are found to be defective within 12 months from the date of manufacture. Under no circumstances does this warranty cover any components which in the opinion of Harvest Tec, LLC. have been subjected to negligent use, misuse, alteration, accident, or if repairs have been made with parts other than those manufactured and obtainable from Harvest Tec, LLC.

Our obligation under this warranty is limited to repairing or replacing free of charge to the original purchaser any part that in our judgment shows evidence of defective or improper workmanship, provided the part is returned to Harvest Tec, Inc. within 30 days of the failure. Parts must be returned through the selling dealer and distributor, transportation charges prepaid.

This warranty shall not be interpreted to render Harvest Tec, LLC. liable for injury or damages of any kind, direct, consequential, or contingent, to persons or property. Furthermore, this warranty does not extend to loss of crop, losses caused by delays or any expense prospective profits or for any other reason. Harvest Tec, LLC. shall not be liable for any recovery greater in amount than the cost or repair of defects in workmanship.

There are no warranties, either expressed or implied, of merchantability or fitness for particular purpose intended or fitness for any other reason.

This warranty cannot guarantee that existing conditions beyond the control of Harvest Tec, Inc. will not affect our ability to obtain materials or manufacture necessary replacement parts.

Harvest Tec, LLC. reserves the right to make design changes, improve design, or change specifications, at any time without any contingent obligation to purchasers of machines and parts previously sold.

Revised 5/22

HARVEST TEC, LLC.
P.O. BOX 63
2821 HARVEY STREET
HUDSON, WI 54016
PHONE: 715-386-9100
1-800-635-7468
FAX: 715-381-1792
Email: info@harvesttec.com