Pin Outs

Controller Harness 006-720B at Cab

Pin 1	Yellow	Flow Meter Sig
Pin 2	Orange	Key +12v
Pin 3	White	Arm Override Sig
Pin 4	Green	H1R-
Pin 5	Yellow	H2R-
Pin 6	Red	Battery 12V+
Pin 7	Green	Tin Sig+
Pin 8	Gray	VTank Sig+
Pin 9	Black	Bat Gnd
Pin 10	Blue	Tout Sig+

PN Controller Harness 006-720L

Pin 1	Red	Bat_ +12V
Pin 2	Black	Bat_Gnd
Pin 3	Blue	PNP1_+
Pin 4	Gray	PNP2_+

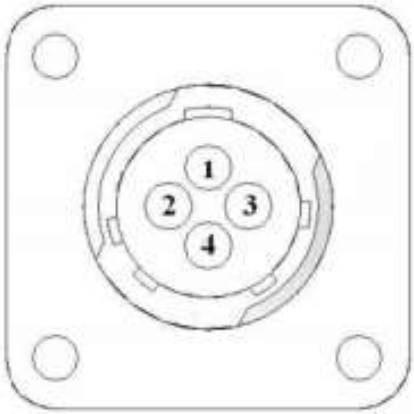

Rear Controller Harness 006-720D

Pin 1	Red	Key +12V
Pin 2	Red	Bat +12V
Pin 3	N/A	Not Used
Pin 4	Green	H1R-
Pin 5	Yellow	H2R-
Pin 6	N/A	Not Used
Pin 7	Purple	PN1 Gnd
Pin 8	Brown	PN2 Gnd
Pin 9	Black	Bat Gnd
Pin 10	White	PValve Sig+

Flow Meter Assembly 006-4730P

Pin 1	Red	12V+
Pin 2	Black	Bat Gnd
Pin 3	White	Sig+
Pin 4	N/A	Not Used

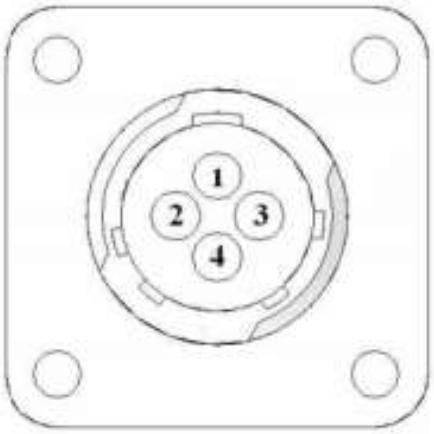

Pin Outs (continued)

Temp Sensor Assembly 006-4732P

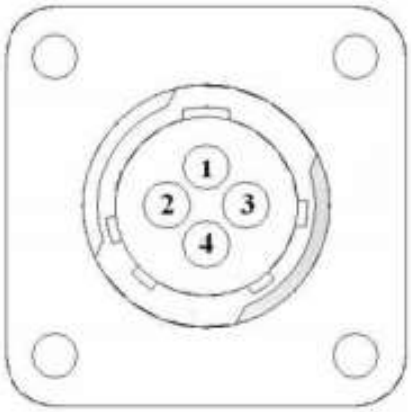

Pin 1	Red	12V+
Pin 2	N/A	Not Used
Pin 3	White	Sig+

Control to Drawbar Harness 006-7717
(Optional Accessory)

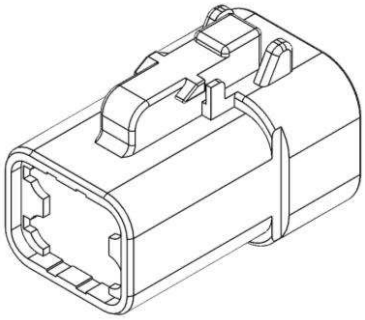

Pin 1	Red	PN_Bat_12V+
Pin 2	Black	PN_Bat_Gnd
Pin 3	Blue	PNP1_+
Pin 4	Gray	PNP2_+

Dew Simulator Cart Harness 006-7720

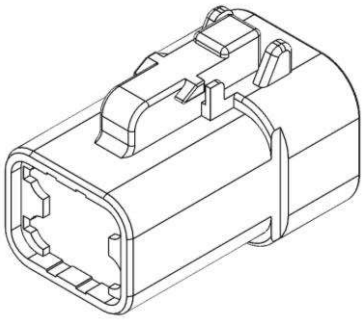

A-*PN Power Connector*

Pin 1	Red	Bat_12V+
Pin 2	Black	Bat_Gnd
Pin 3	Blue	PNP1_+
Pin 4	Gray	PNP2_+

B-*Cab Controller Connector*

Pin 1	Yellow / White	Flow Meter Sig
Pin 2	Orange	Key 12V+
Pin 3	White	Arm Override 12V+
Pin 4	Green	H1R1-
Pin 5	Yellow	H2R2-
Pin 6	Red	Bat_12V+
Pin 7	Green / White	Arm – Sig+
Pin 8	Gray	VTank-Sig+
Pin 9	Black	Bat-Gnd
Pin 10	Blue / White	Tout Sig+

Pin Outs (continued)

E-*2 Way Valve*

Pin 1	Red	12V+
Pin 2	Black	Bat Gnd
Pin 3	White	Sig+

F- *Flow Meter*

Pin 1	Re	12V+
Pin 2	Black	Bat Gnd
Pin 3	Yellow/ White	Sig+
Pin 4	Not Used	N/A

G- *Arm Switch*

1/4" MQC	Red	ArmOR_IN
1/4" FQC	Orange	ArmOR_OUT

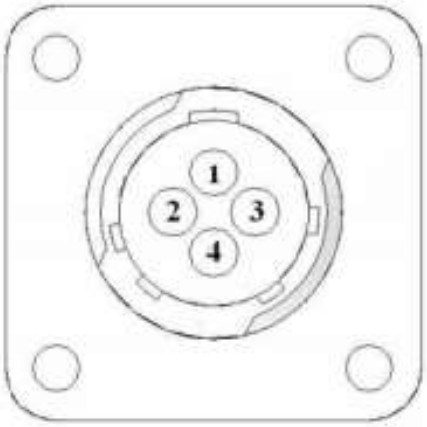

K- *T-in Sensor*

Pin 1	Red	12V+
Pin 2	Not Used	N/A
Pin 3	Green/ White	Tin_Sig+
Pin 4	Not Used	N/A

Pin Outs (continued)

J- *Warmup Valve*

1	Red	12V+
2	Black	Bat Gnd
3	White	Sig+

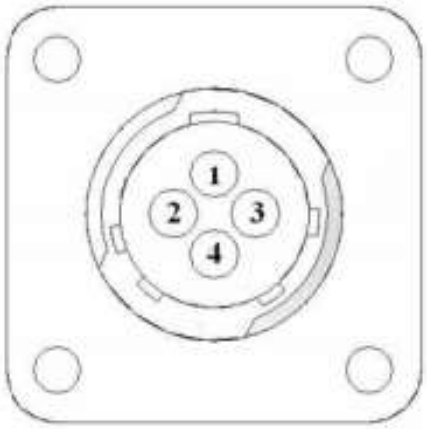

L- *T-Out Sensor*

Pin 1	Red	12V+
Pin 2	Not Used	N/A
Pin 3	Blue/ White	Tin_Sig+
Pin 4	Not Used	N/A

O- *Connection to Rear Controller*

Pin 1	Red	Key +12V
Pin 2	Red	Bat +12V
Pin 3	N/A	Not Used
Pin 4	Green	H1R-
Pin 5	Yellow	H2R-
Pin 6	N/A	Not Used
Pin 7	Purple	PN1 Gnd
Pin 8	Brown	PN2 Gnd
Pin 9	Black	Bat Gnd
Pin 10	White	PValve Sig+

Trailer Plug

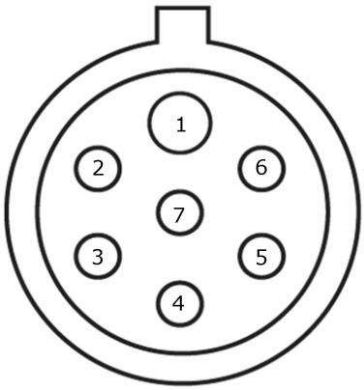

Pin 1	Blue	Ground
Pin 2	Black	Marker
Pin 3	Yellow	Left Signal
Pin 4	Red	Stop Lamp
Pin 5	Green	Right Signal
Pin 6	Brown	Tail Lamps
Pin 7	Not Used	N/A

Pin Outs (continued)

Control to Drawbar Harness 006-7722

Pin 1	Yellow / White	Flow Meter Sig
Pin 2	Orange	Key 12V+
Pin 3	White	Arm Override 12V+
Pin 4	Green	H1R1-
Pin 5	Yellow	H2R2-
Pin 6	Blue	Bat-12V+
Pin 7	Green / White	Arm – Sig+
Pin 8	Gray	VTank-Sig+
Pin 9	Black	Bat-Gnd
Pin 10	Blue / White	Tout Sig+

Hose Matrix

Hose Description	Part No.	Qty.
Perimeter Nozzles Hoses		
Supply- 3/4" EPDM	002-9007	15 ft.
Nozzle Supply- 1/2" EPDM	002-9017	16 ft.
Suction Hose		
1” Suction Tubing	002-9005	6 ft.
1-1/2" Suction Tubing	002-9008	7 ft.
2” Suction Tubing	002-9004	15 ft.
Hydraulic Hoses		
*All hydraulic hoses have 1/2" NPT on each end		
1/2” x 14 ft Hyd Hose OAL	002-9714	2
1/2" x 68” Hyd Hose OAL	002-9714-68	1
1/2" x 80” Hyd Hose OAL	002-7914-80	1
1/2" x12.5” Hyd Hose OAL	002-9714-12.5	1
1/2" x 20” Hyd Hose OAL	002-9714-20	1
1/2" x 20” Hyd Hose OAL	002-9714-24	1

Hose Description	Part No.	Qty.
Supply Hose		
11 ft Pump to H1	002-9715	1
Return Lines		
Green Strip Heater Hose	002-9717	33.75
Sight Tube		
Diesel Tank	002-9709	2 ft.
Heater Hose		
H1 to H2	002-9716B	51 in.
Reel KZ Valve to Reel	002-9717C	20.25in.
Warmup Valve to 2” Y-Strainer	002-9718B	56 in.
H2 to Warmup Valve	002-9718D	23 in.
Fuel Line		
3/8” Fuel Line	002-9710	10 ft.
1/4" Fuel Line	002-9711	10 ft.